SELIG POLYSCOPE MOVIE PROJECTORS

Made by William N. Selig

A compilation

By

Soterios Gardiakos

May 5, 2010, May 26, 2010, Aug. 12, 2010, September 20, 2011, September 25, 2011

UNIGRAPHICS INC

2010

Copyright 2010
Soterios Gardiakos

http://www.bioscope.biz/

http://gardiakos.com/

UNIGRAPHICS INC

Aurora, Illinois. U.S.A.

Kalamata, Messinias, Greece

Colonel William Selig

CONTENTS

I SELIG STUDIOFACILITIES

II CHAIN DRIVEN PROJECTORS (Early)

III CHAIN DRIVENPROJECTORS (Wood Front)

IV CHAIN DRIVEN PROJECTORS (Metal Front)

V GEAR DRIVEN PROJECTORS

VI LATE GEAR DRIVEN PROJECTORS

VII 1903 FILM CATALOGUE (Excerpts)

VIII SOME SELIG POSTERS (A small selection)

IX ADDENDUM

X BIBLIOGRAPHY

I
SELIG STUDIO FACILITIES

SELIG STUDIO FACILITIES

"It was here that the first Selig projector was duped from the Lumiere Cinematographe in 1897."
Ray Bryan files, Museum of the Moving Image, Astoria, New York

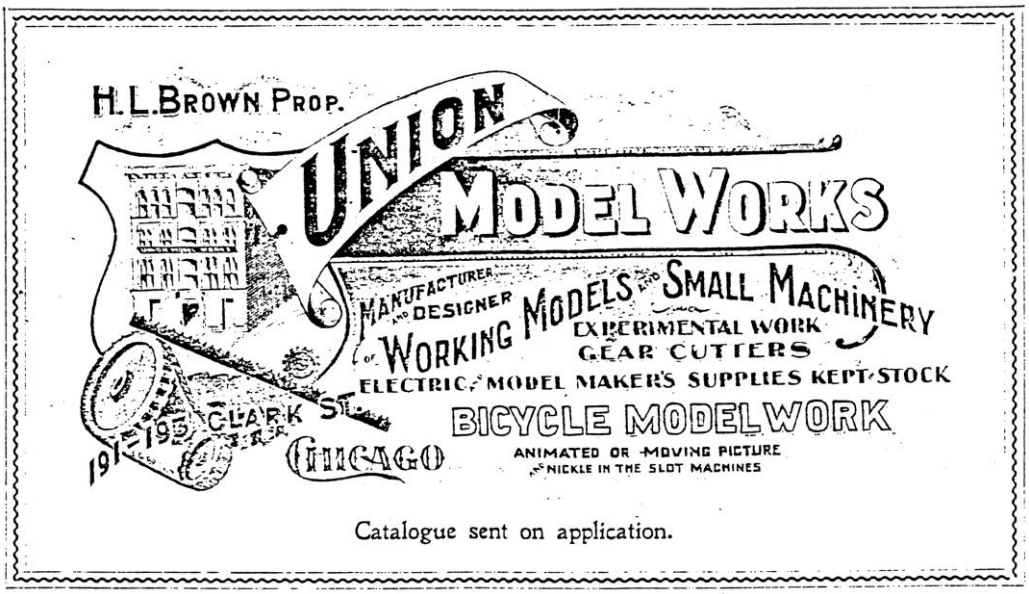

1898 Union Model Works advertisement, note that they advertise "ANIMATED OR MOVING PICTURE... MACHINES,
Courtesy Carey Williams

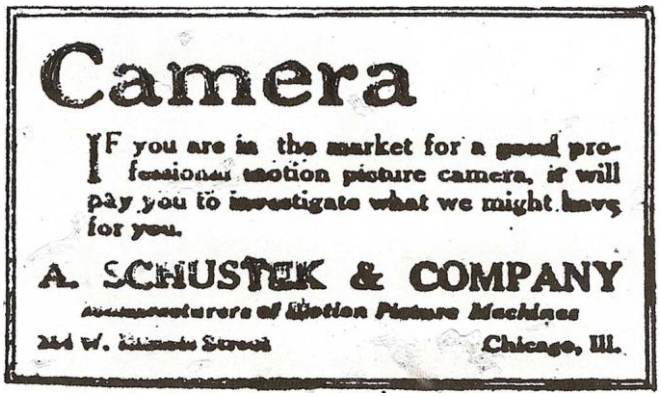

August Schuster who worked for the Union Model Works and duplicated the Lumiere Cinematographe for William Selig, 1n 1917 was manufacturing cameras and projectors.
Ray Bryan files, Museum of the Moving Image, Astoria, New York

SELIG STUDIO FACILITIES

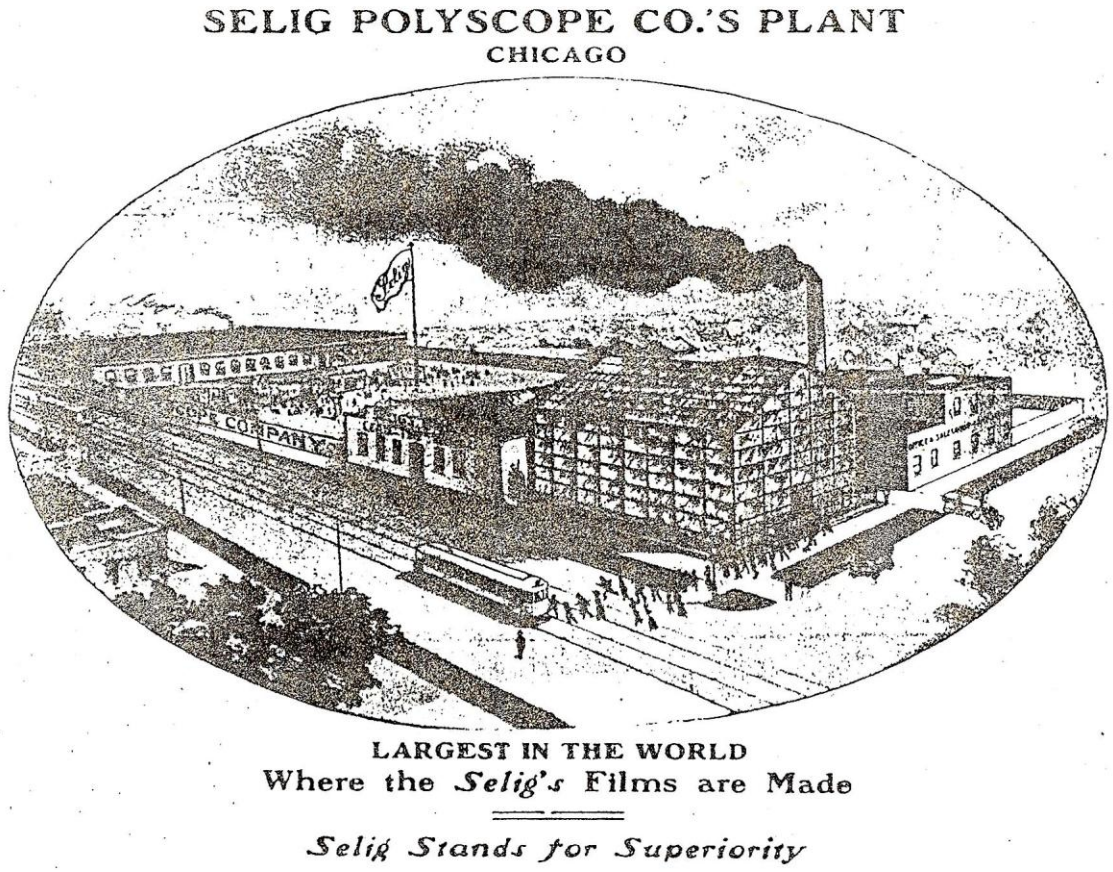

From an undated Selig Polyscope catalog

SELIG STUDIO FACILITIES

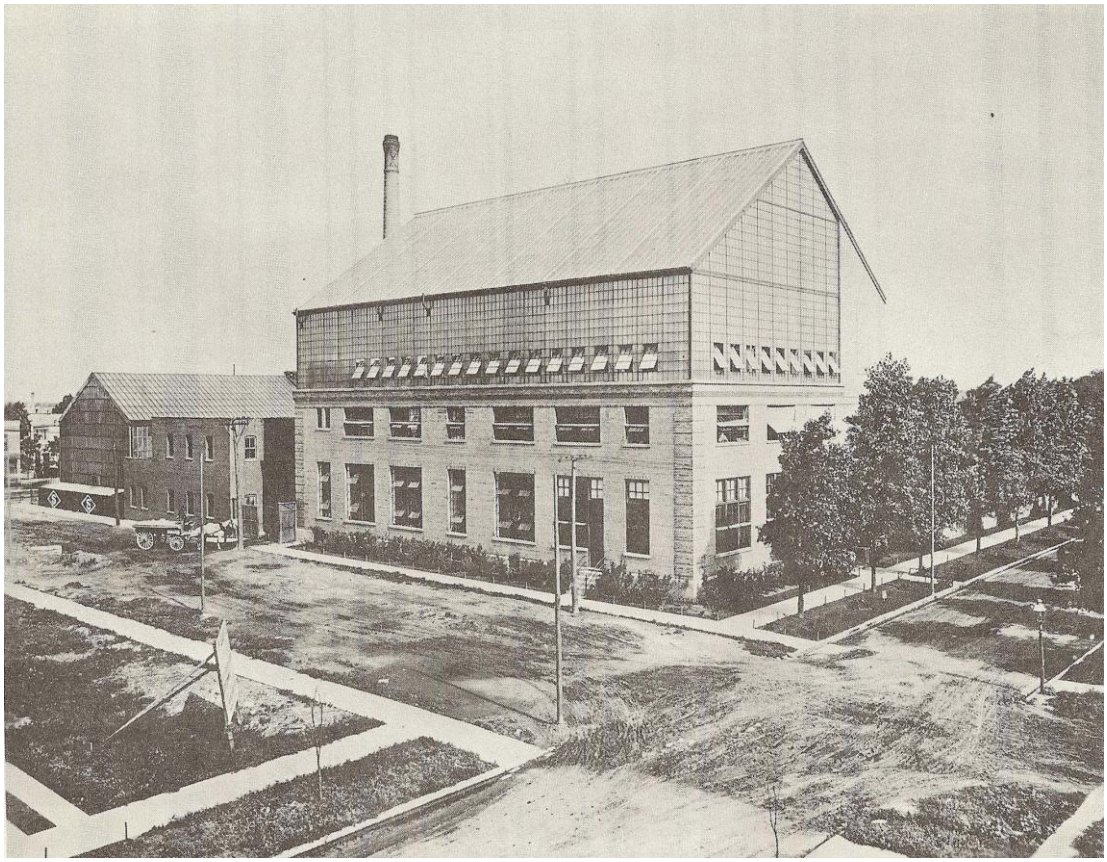

"The reality in 1911 was somewhat less glamorous; dirt roads and uncompleted landscapes gave it the appearance of a large manufacturing building instead of the magical wellspring of celluloid films".
Kalton C. Lahue, *MOTION PICTURE PIONEER: The Selig Polyscope Company*, p 36.

Entrance to the Selig Zoo, Eastlake Park, Los Angeles (from an old Post Card)

SELIG STUDIO FACILITIES

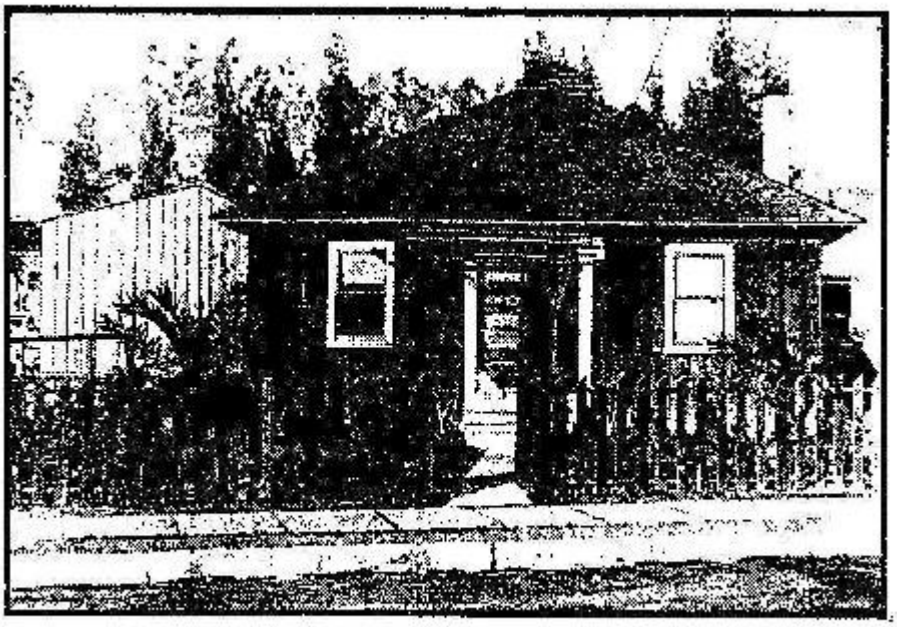

THIS IS THE FIRST REAL FILM STUDIO IN LOS ANGELES. NOTHING WAS SUPER-COLOSSAL IN THOSE DAYS EXCEPT THE PRODUCERS' EXPECTATIONS

The original Selig-Polyscope Studio that was located at 1845 Glendale in the Edendale area of Los Angeles (*Los Angeles Times*, May 5, 1940)

Photo above shows Selig's lot in Edendale where he built the first official motion picture studio (LAPL)

Remembering the early days of the Edendale studio, Bosworth said:

SELIG STUDIO FACILITIES

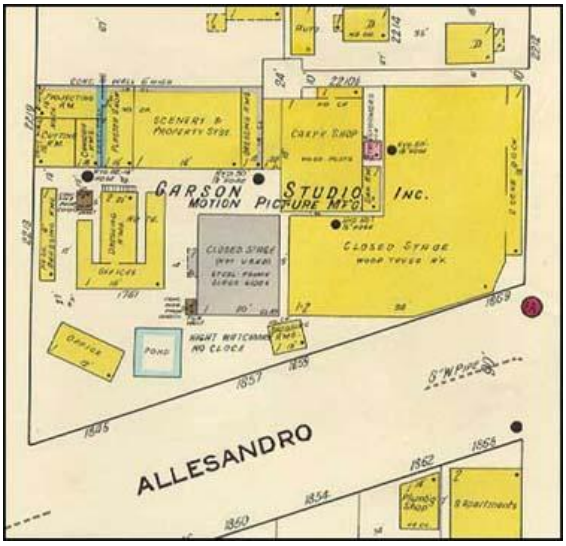

A map of the studio when it was known as Garson Studios in the mid 1920s. Note: The street address was originally Allesandro before it was changed to Glendale.

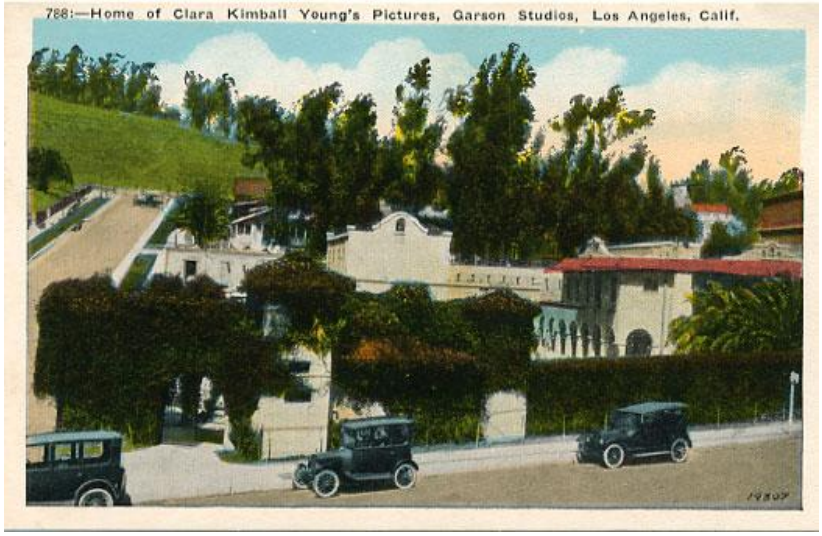

Postcard of the former Selig-Polyscope Studio (known as Garson Studios here) in the mid 1920s. (Postcard courtesy of Greta de Groat)

http://www.google.com/imgres?imgurl=http://blog.allanellenberger.com/wp-content/uploads/selig-polyscope-3.jpg&imgrefurl=http://blog.allanellenberger.com/book-flm-news/selig-polyscope-studios/&usg=__aoQvaFnncRbDBtYeSqn0AV-azKA=&h=386&w=479&sz=89&hl=en&start=18&sig2=PuNQ-E-c4h1Ee8ekrWOiOQ&zoom=1&itbs=1&tbnid=h5LUnT0GLCVDLM:&tbnh=104&tbnw=129&prev=/images%3Fq%3Dselig%2Bstudios%2Bcalifornia%26hl%3Den%26sa%3DG%26gbv%3D2%26tbs%3Disch:1&ei=1udwTPavIsO88galuZjtCg

II
CHAIN DRIVEN PROJECTORS (Early)

CHAIN DRIVEN PROJECTORS (Early)

Polyscope 35 mm movie projector
Carey Williams Collection

CHAIN DRIVEN PROJECTORS (Early)

Polyscope 35 mm movie projector
Carey Williams Collection

CHAIN DRIVEN PROJECTORS (Early)

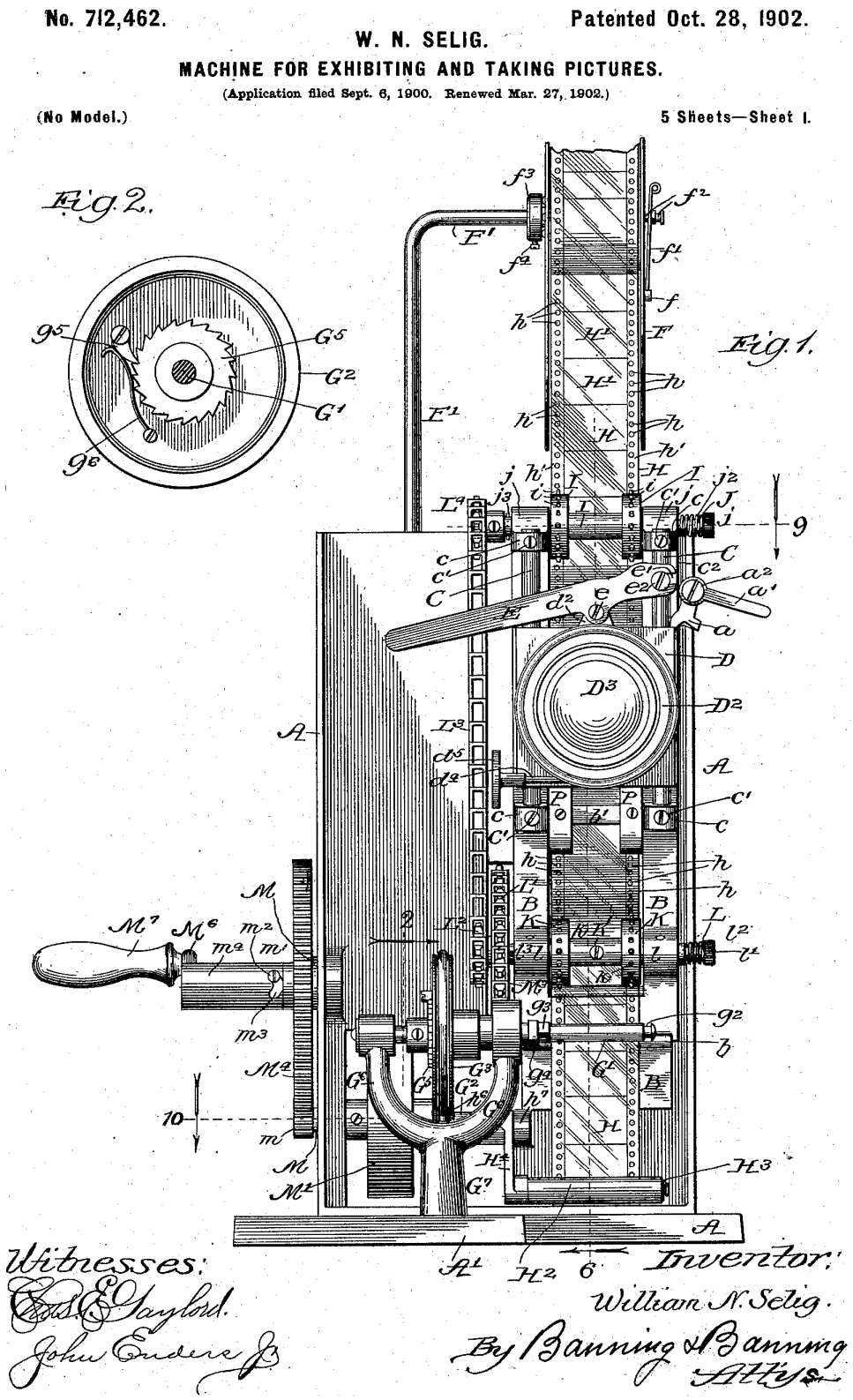

W. N. Selig Patent 712,462 Patented Oct. 28, 1902

CHAIN DRIVEN PROJECTORS (Early)

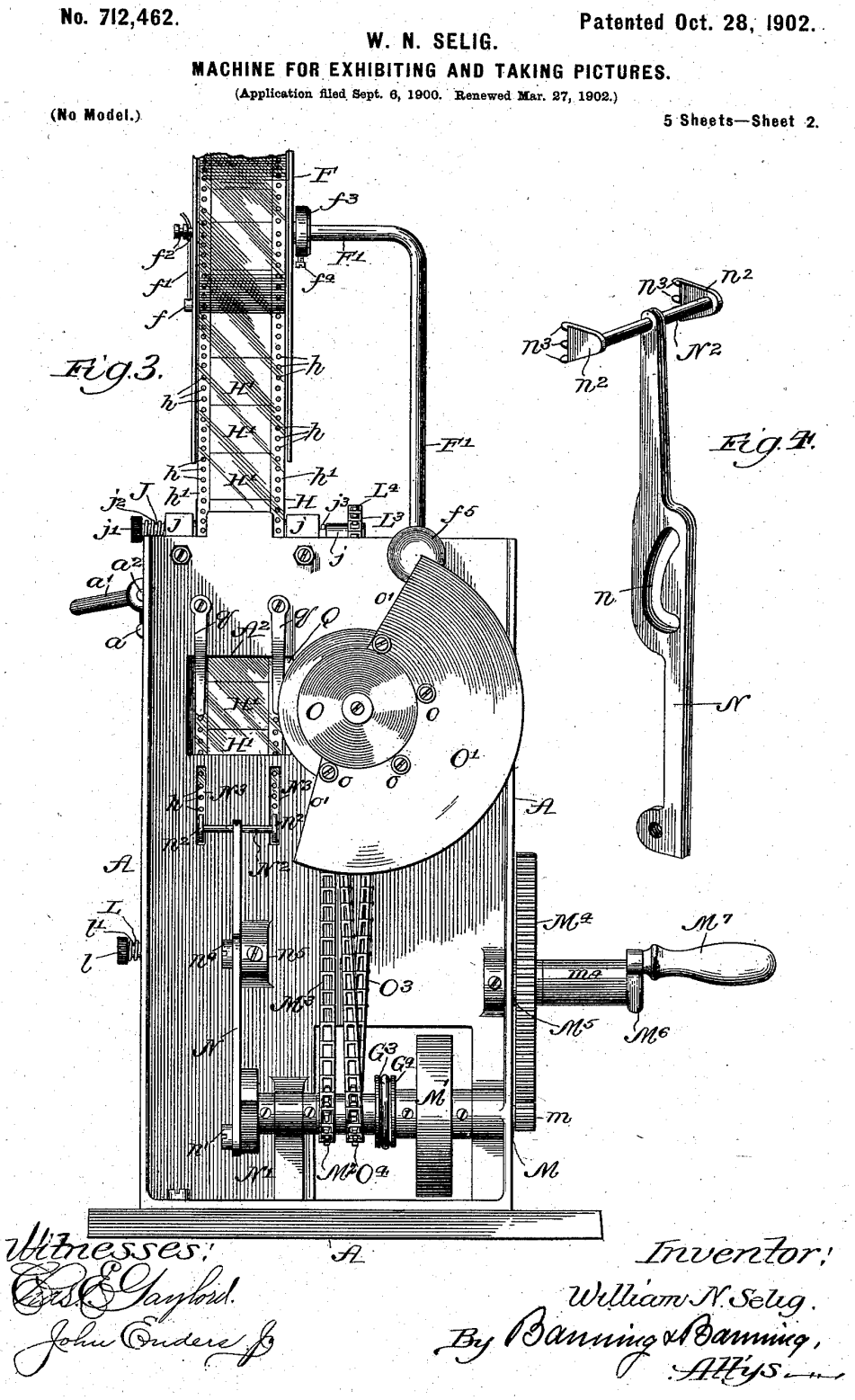

W. N. Selig Patent 712,462 Patented Oct. 28, 1902

CHAIN DRIVEN PROJECTORS (Early)

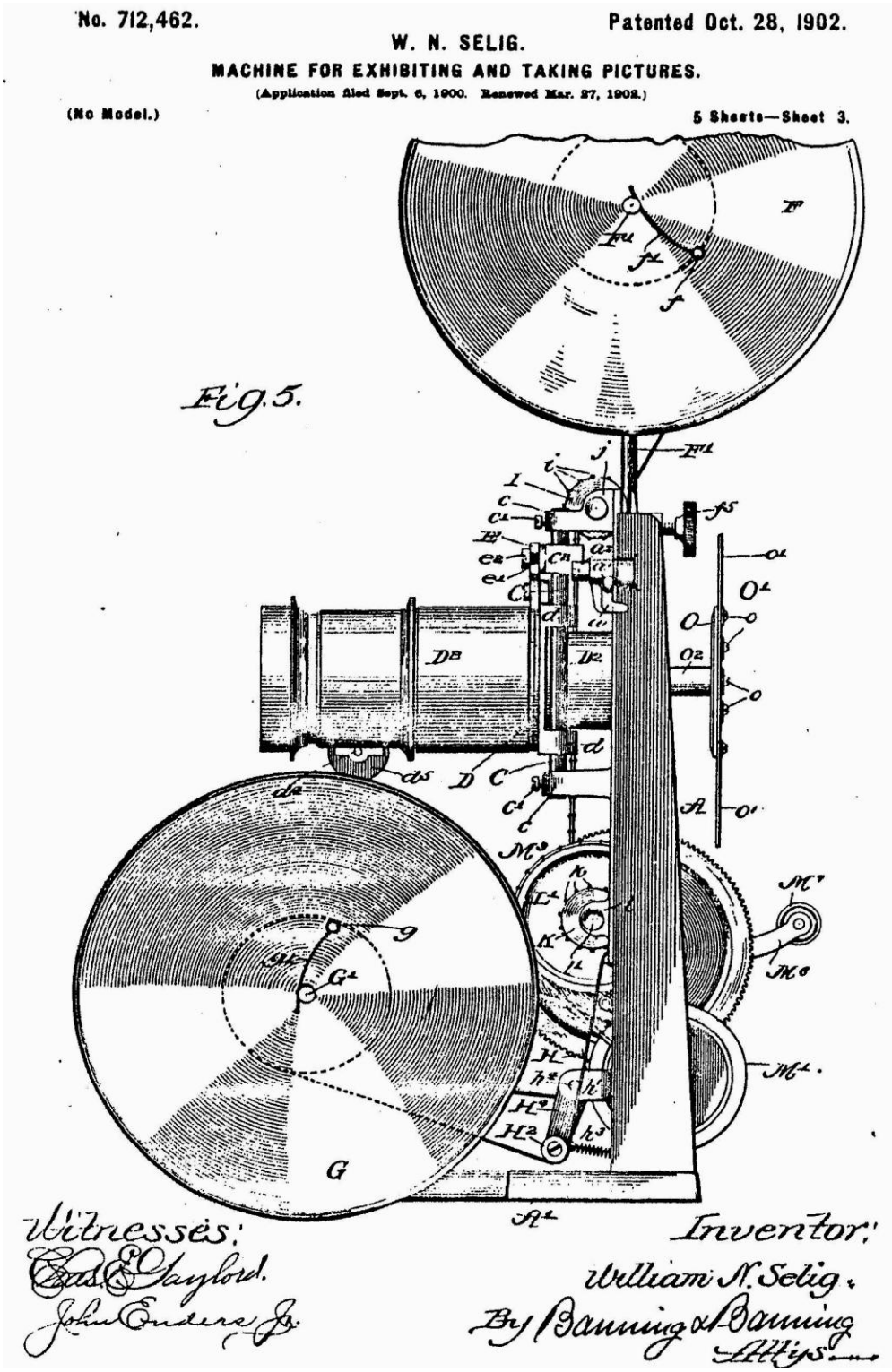

W. N. Selig Patent 712,462 Patented Oct. 28, 1902

CHAIN DRIVEN PROJECTORS (Early)

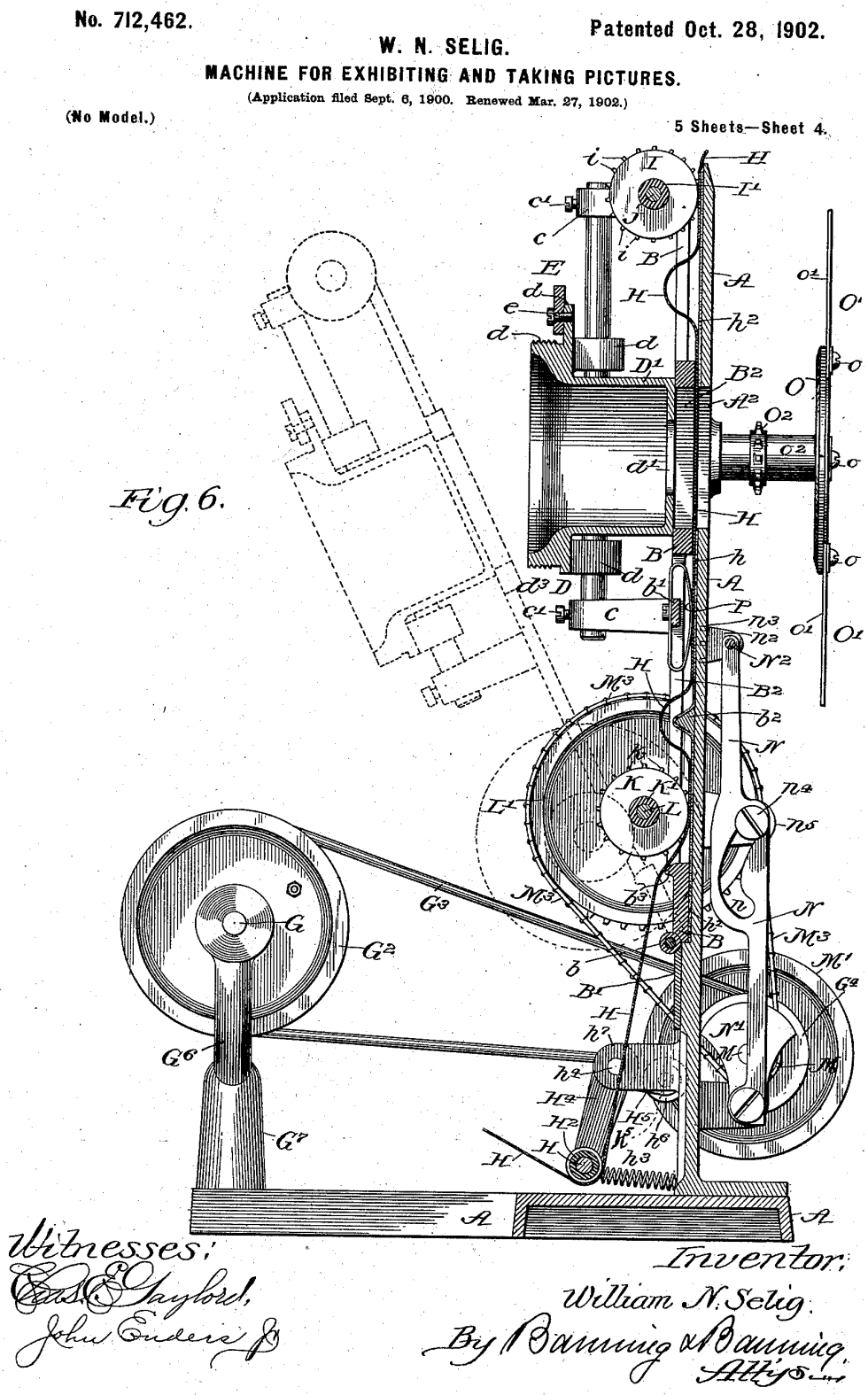

W. N. Selig Patent 712,462 Patented Oct. 28, 1902

CHAIN DRIVEN PROJECTORS (Early)

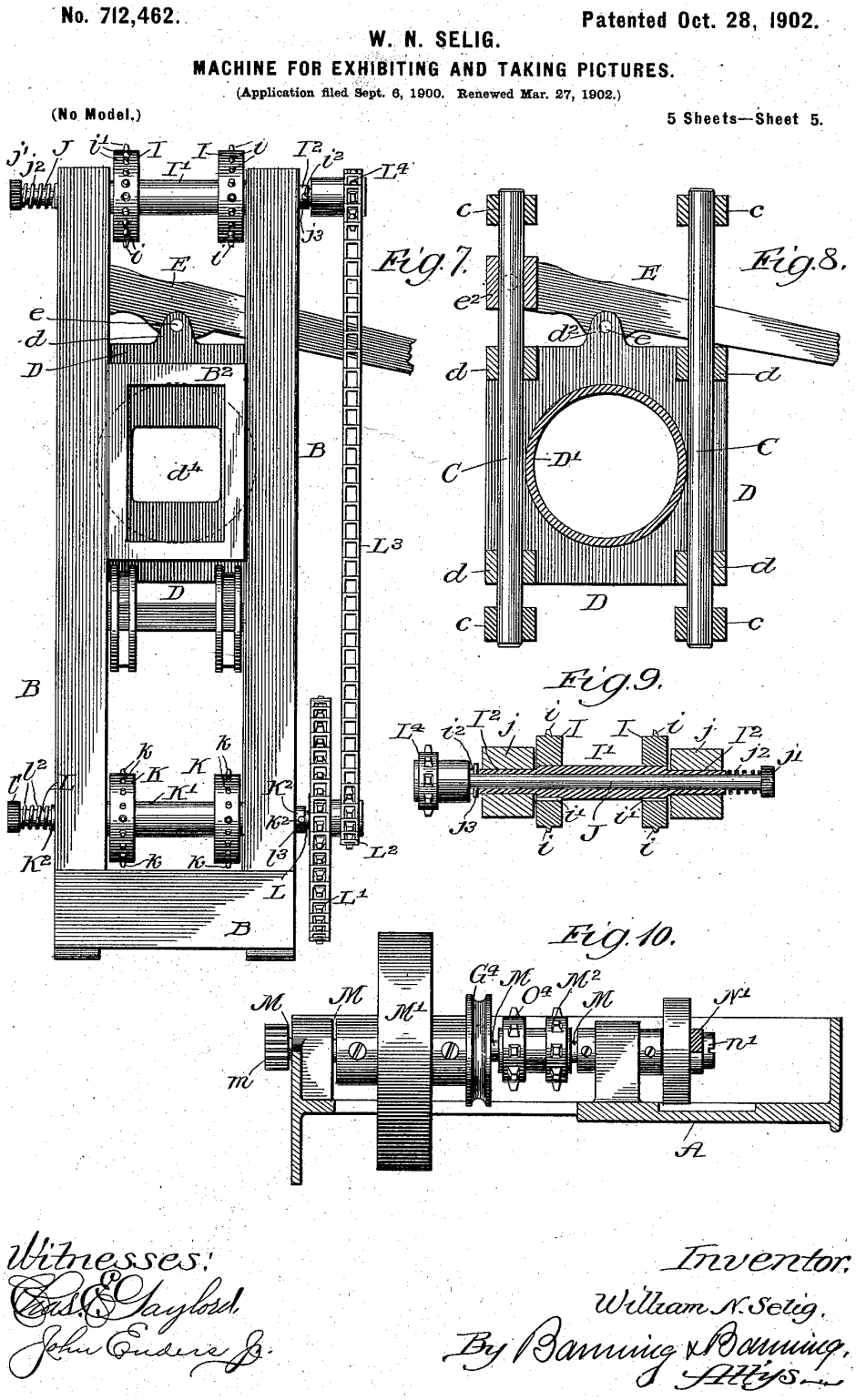

W. N. Selig Patent 712,462 Patented Oct. 28, 1902

III
CHAIN DRIVEN PROJECTORS
(Wood Front)

CHAIN DRIVEN PROJECTORS (Wood Front)

Selig Polyscope 35 mm movie projector wood front
Carey Williams collection

CHAIN DRIVEN PROJECTORS (Wood Front)

Selig Polyscope 35 mm movie projector wood front
Carey Williams collection

CHAIN DRIVEN PROJECTORS (Wood Front)

TOP SPROCKET SUPPORT

PHOTO NOT AVAILABLE AT THIS TIME

Selig Polyscope projector wood front
Carey Williams collection

Selig Polyscope projector Serial number 18
Soterios Gardiakos collection (purchased in Indiana)

IV
CHAIN DRIVEN PROJECTORS
(Metal Front)

CHAIN DRIVEN PROJECTORS (Metal Front)

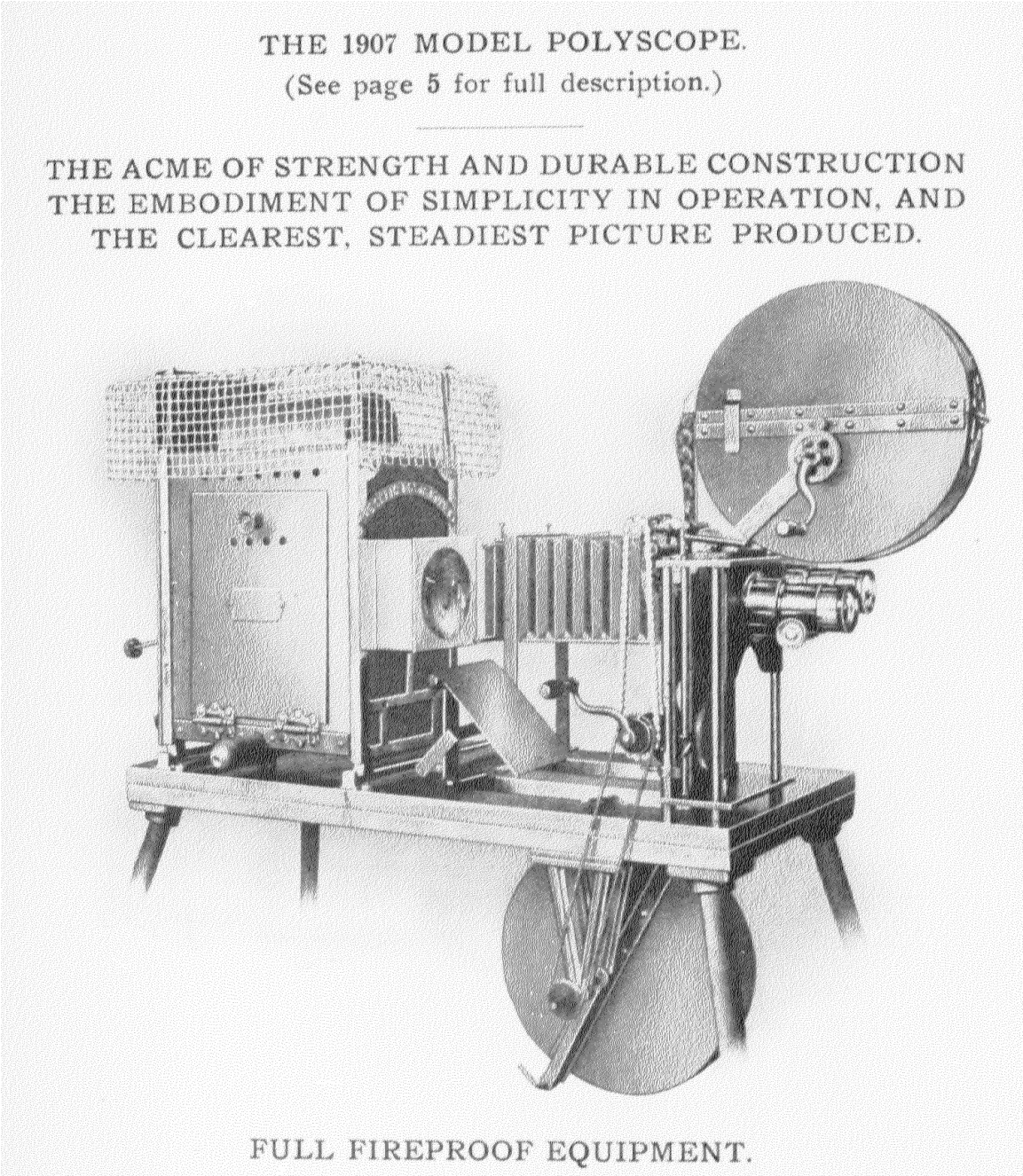

Polyscope 35 mm movie projector
From the 1907 Polyscope catalog,

CHAIN DRIVEN PROJECTORS (Metal Front)

1907 POLYSCOPE, WITH BOX MAGAZINE
THE PRACTICAL EXHIBITION OUTFIT
Economical - Does not wear or tear Films - a Picture Free from Flicker or Vibration

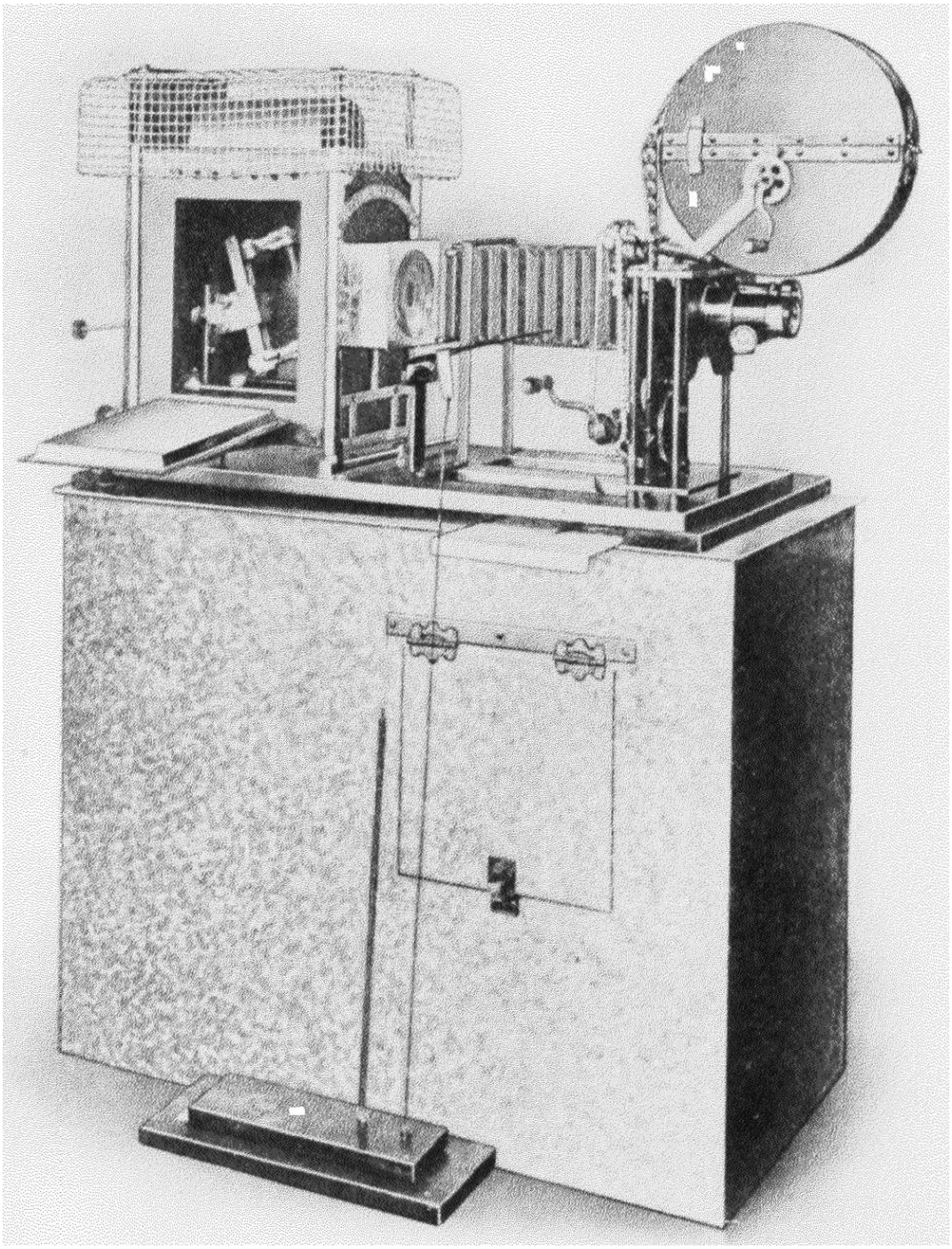

Polyscope 35 mm movie projector
From the 1907 Polyscope catalog,

CHAIN DRIVEN PROJECTORS (Metal Front)

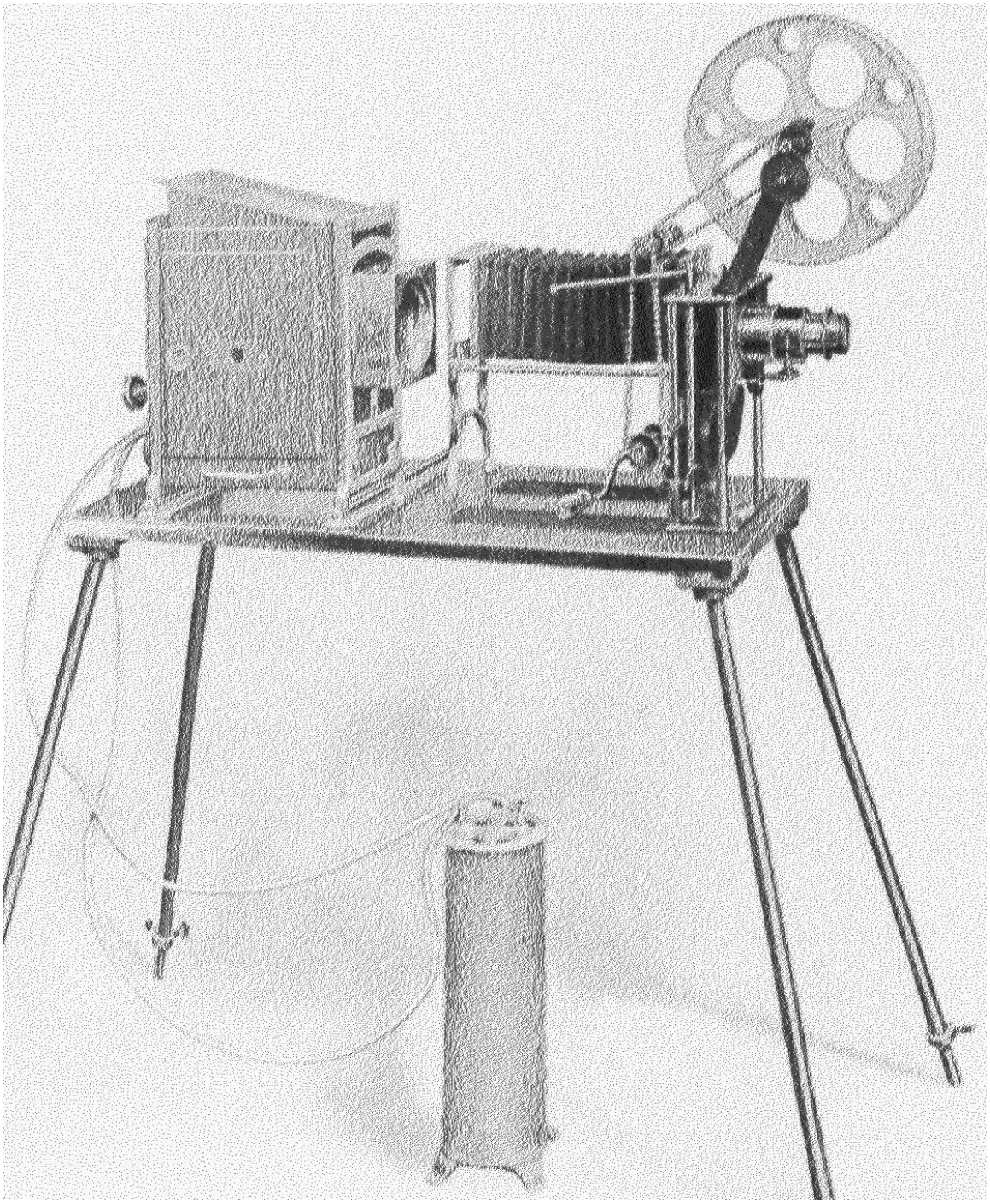

Polyscope 35 mm movie projector
From the 1907 Polyscope catalog,

CHAIN DRIVEN PROJECTORS (Metal Front)

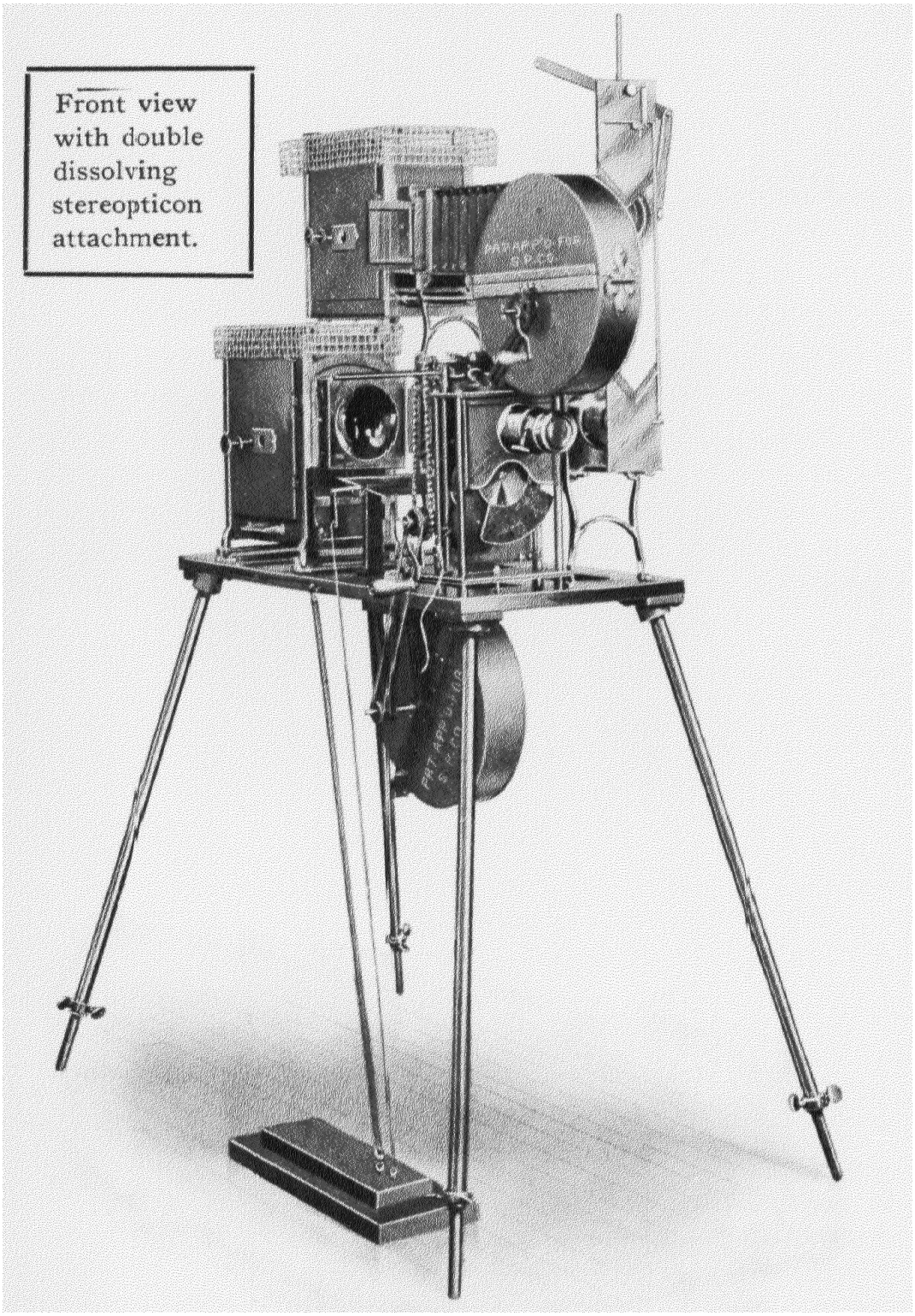

Polyscope 35 mm movie projector
From the 1907 Polyscope catalog

CHAIN DRIVEN PROJECTORS (Metal Front)

THE 1907 MODEL POLYSCOPE
With double dissolving stereopticon attachment

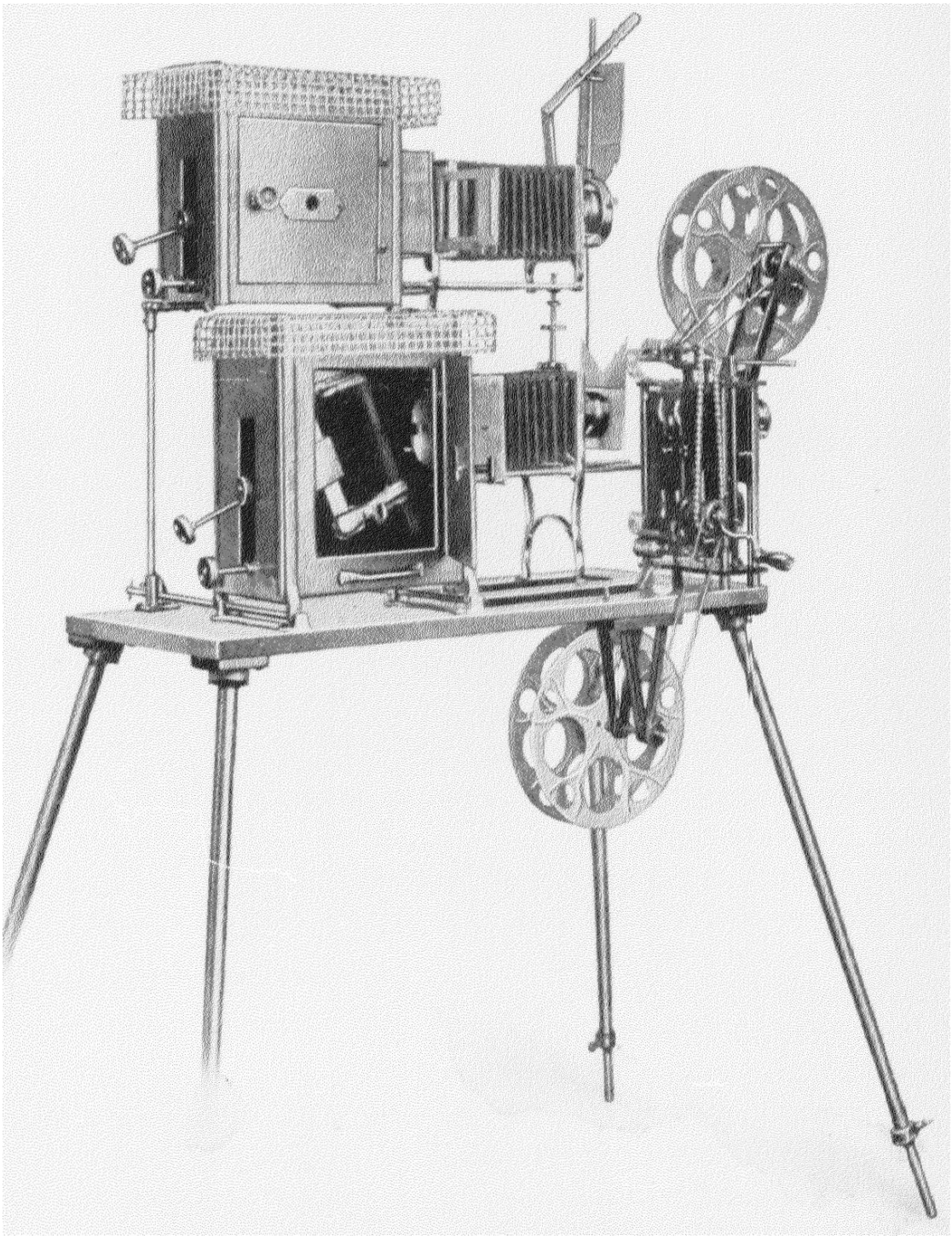

Polyscope 35 mm movie projector
From the 1907 Polyscope catalog

CHAIN DRIVEN PROJECTORS (Metal Front)

Selig Polyscope 35 mm movie projector Serial number 18
Soterios Gardiakos collection (purchased in Indiana)

CHAIN DRIVEN PROJECTORS (Metal Front)

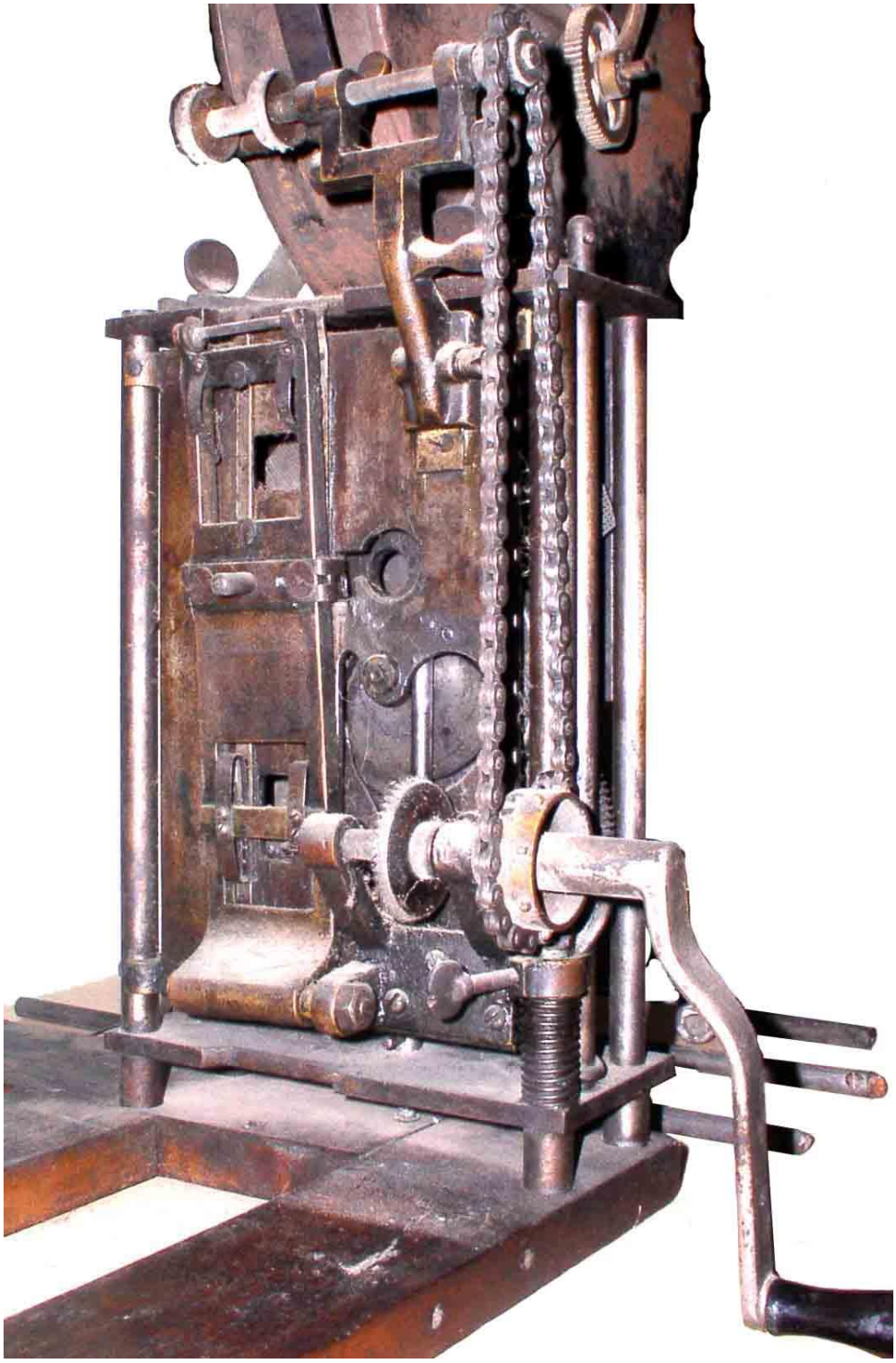

Selig Polyscope 35 mm movie projector Serial number 18
Soterios Gardiakos collection (purchased in Indiana)

CHAIN DRIVEN PROJECTORS (Metal Front)

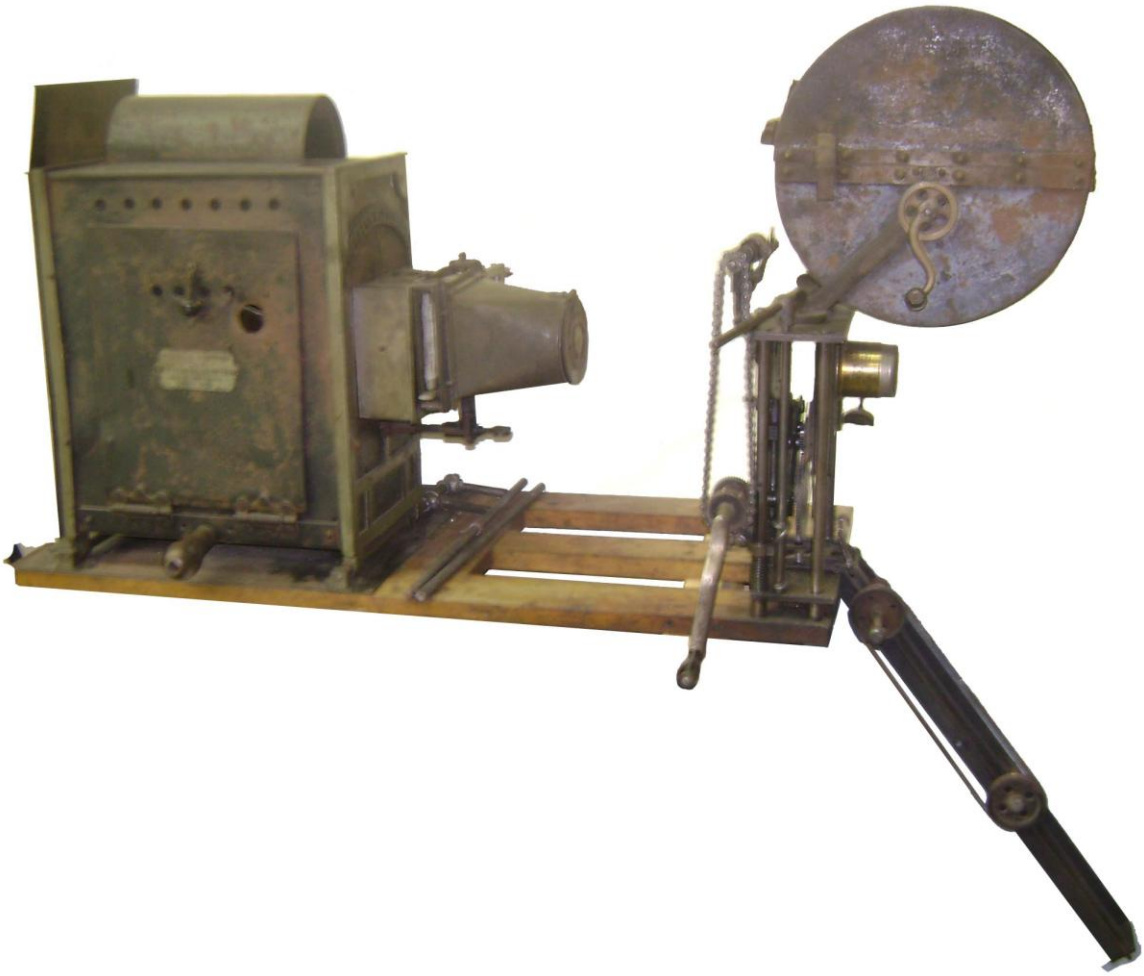

Selig Polyscope 35 mm movie projector Serial number 18
This was a tank top model as there are no legs or drilled holes in the bottom of the wood
Soterios Gardiakos collection (purchased in Indiana)

CHAIN DRIVEN PROJECTORS (Metal Front)

Polyscope reel take up arm

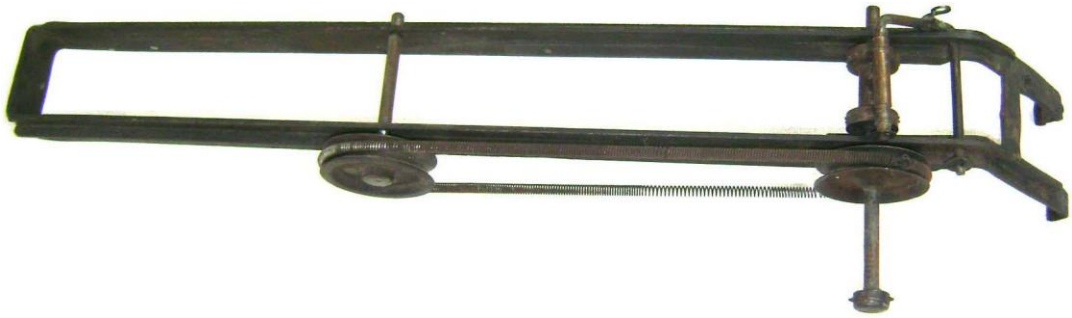

Selig Polyscope take up reel that came with the above machine. It was unclear how this was fastened to function, but once I realized that it was assembled wrong it all worked fine. Soterios Gardiakos collection (purchased in Indiana)

V

GEAR DRIVEN PROJECTORS

GEAR DRIVEN PROJECTORS

Polyscope 35 mm movie projector
Serial number 342 Carey Williams collection (formerly the Malkames collection)

GEAR DRIVEN PROJECTORS

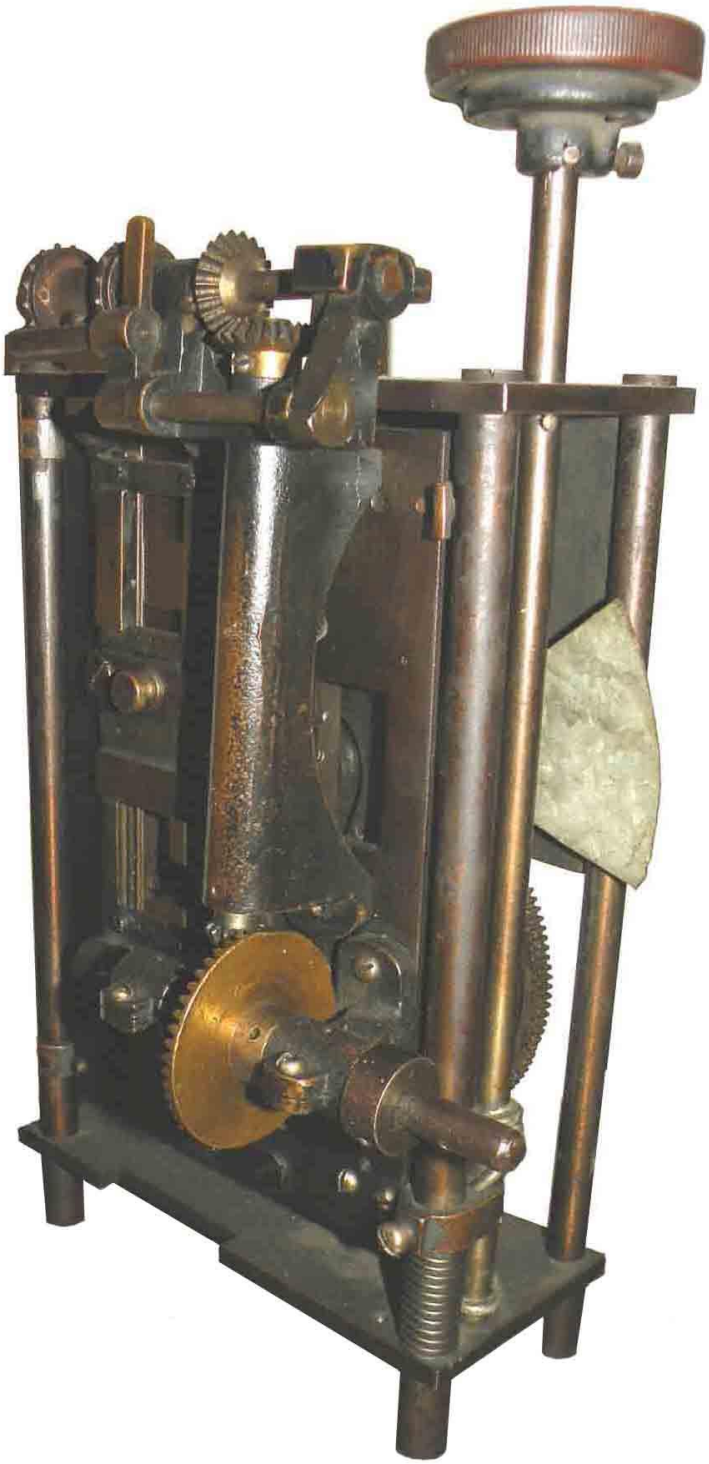

Polyscope 35 mm movie projector
Serial number 342 Carey Williams collection (formerly the Malkames collection)

GEAR DRIVEN PROJECTORS

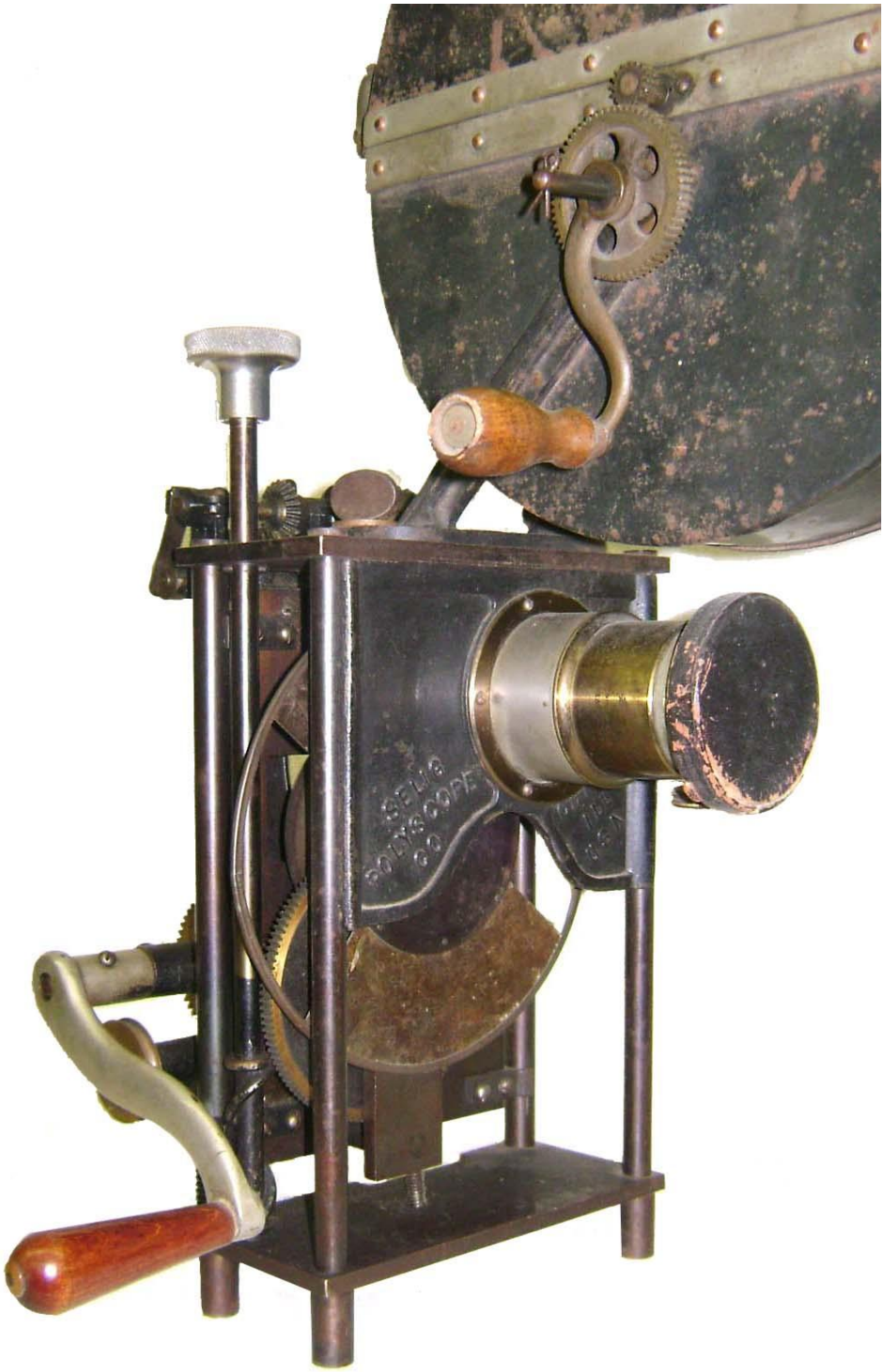

Polyscope 35 mm movie projector gear driven.
The steel knob on the framer is not original
Serial number 417 Soterios Gardiakos collection (purchased in Iowa)

GEAR DRIVEN PROJECTORS

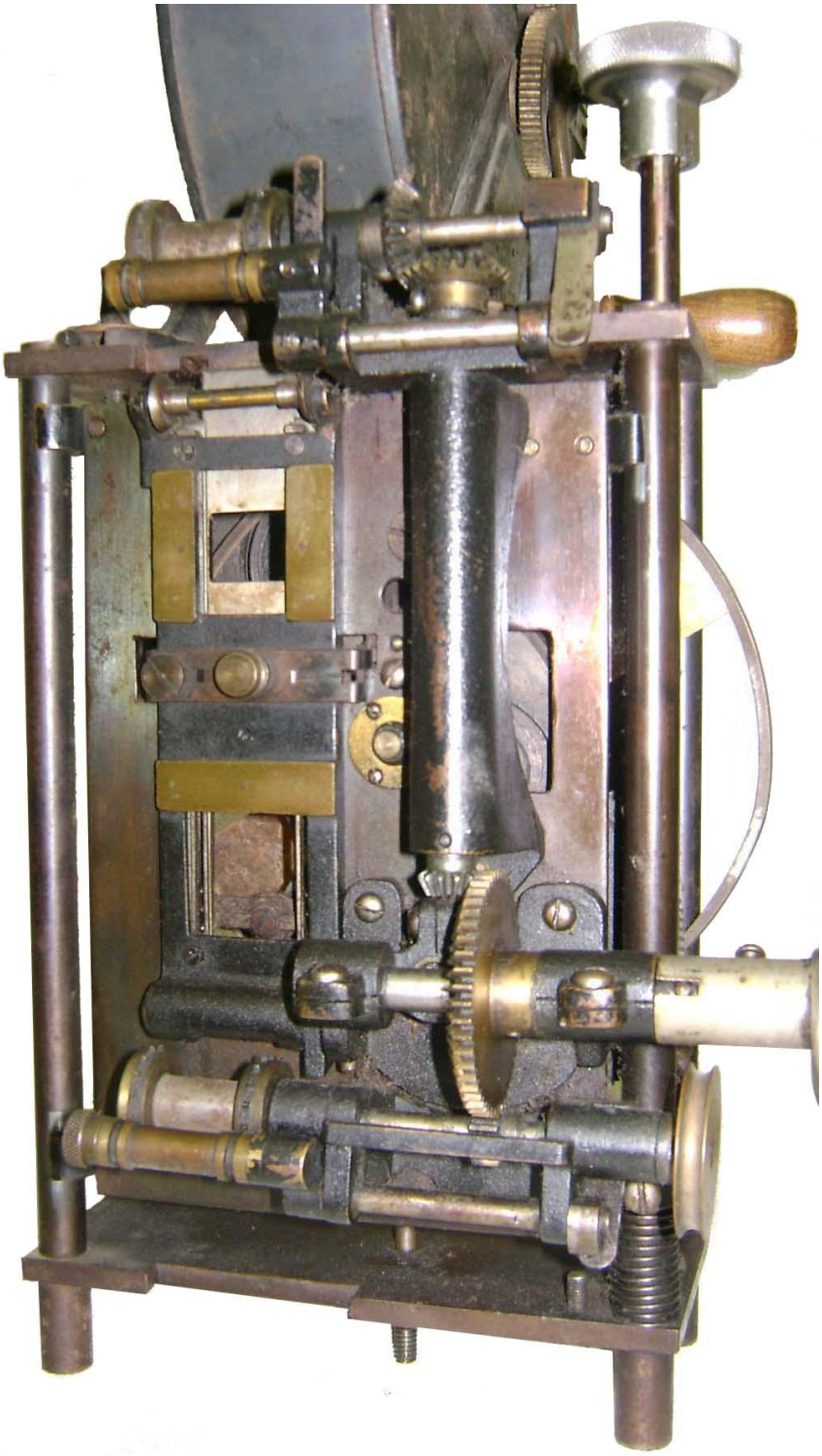

Polyscope 35 mm movie projector gear driven
The steel knob on the framer is not original
Serial number 417 Soterios Gardiakos collection (purchased in Iowa)

GEAR DRIVEN PROJECTORS

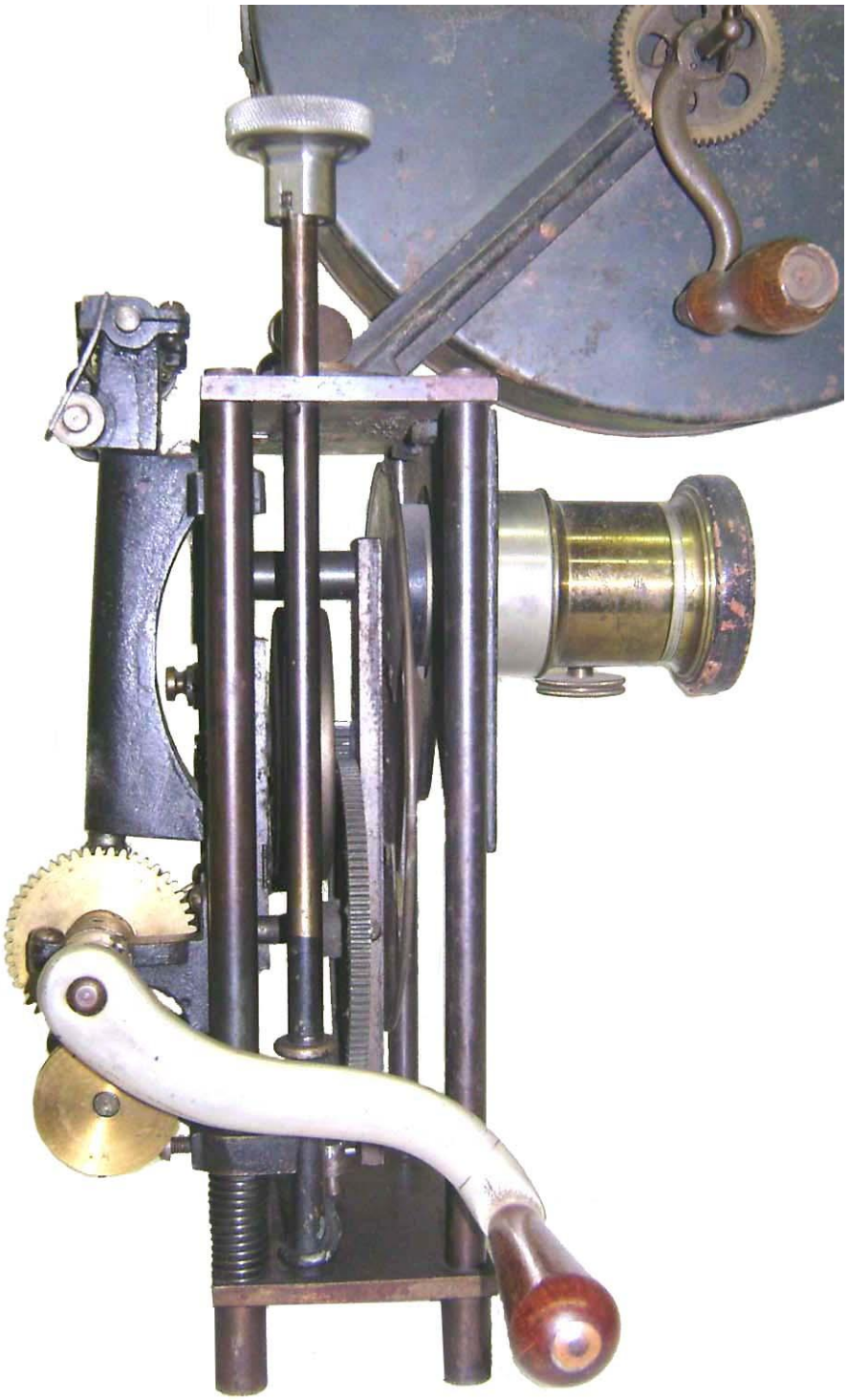

Polyscope 35 mm movie projector gear driven
The steel knob on the framer is not original
Serial number 417 Soterios Gardiakos collection (purchased in Iowa)

GEAR DRIVEN PROJECTORS

Polyscope 35 mm movie projector gear driven,
trunk and screen used by the traveling showman.
Serial number 417 Soterios Gardiakos collection (purchased in Iowa)

VI
LATE GEAR DRIVEN PROJECTORS

LATE GEAR DRIVEN PROJECTORS

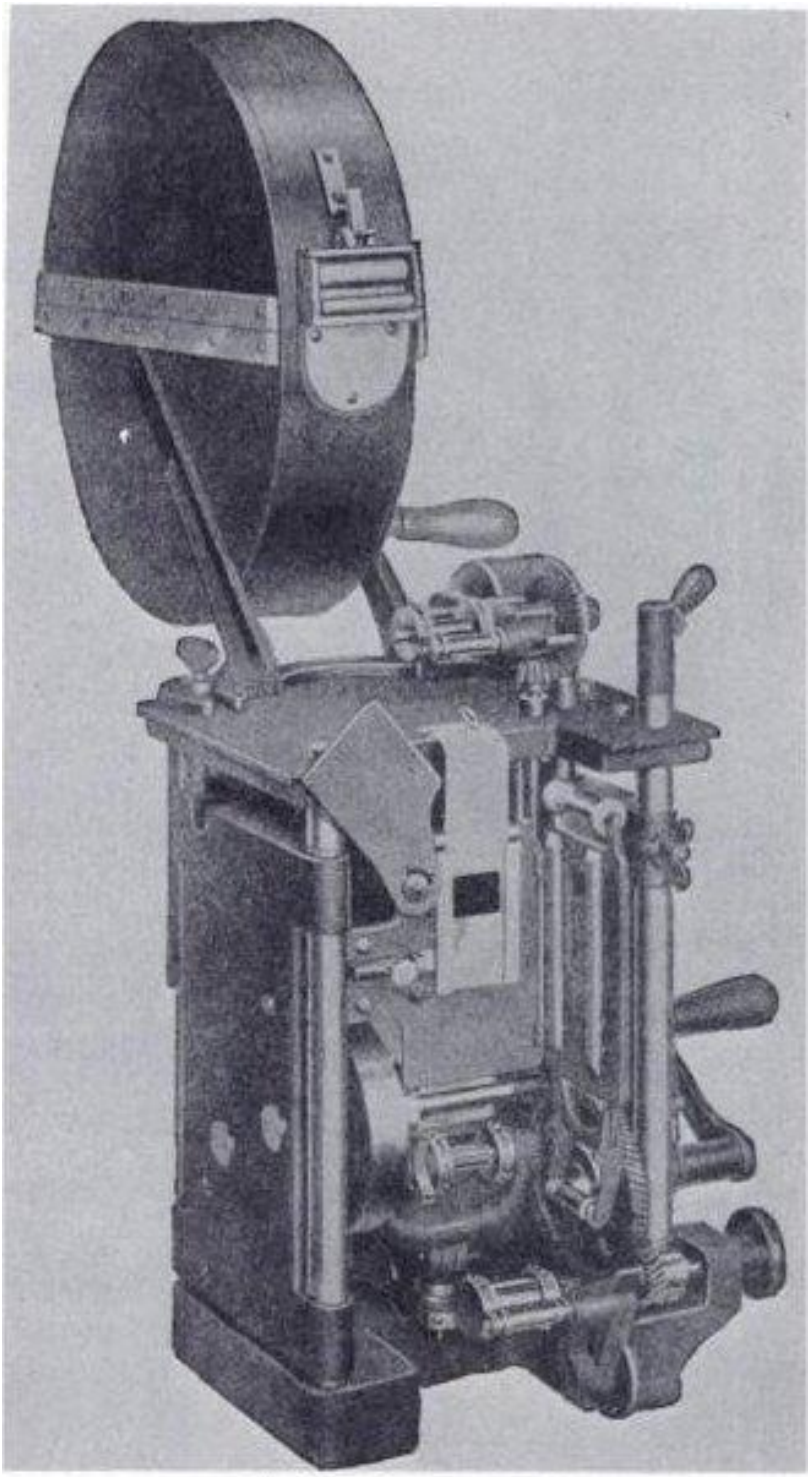

Fig. 95. Selig Polyscope Motion Head

Polyscope 35 mm movie projector late gear driven
David Sherrill Hulfish Cyclopedia of Motion Picture Work

LATE GEAR DRIVEN PROJECTORS

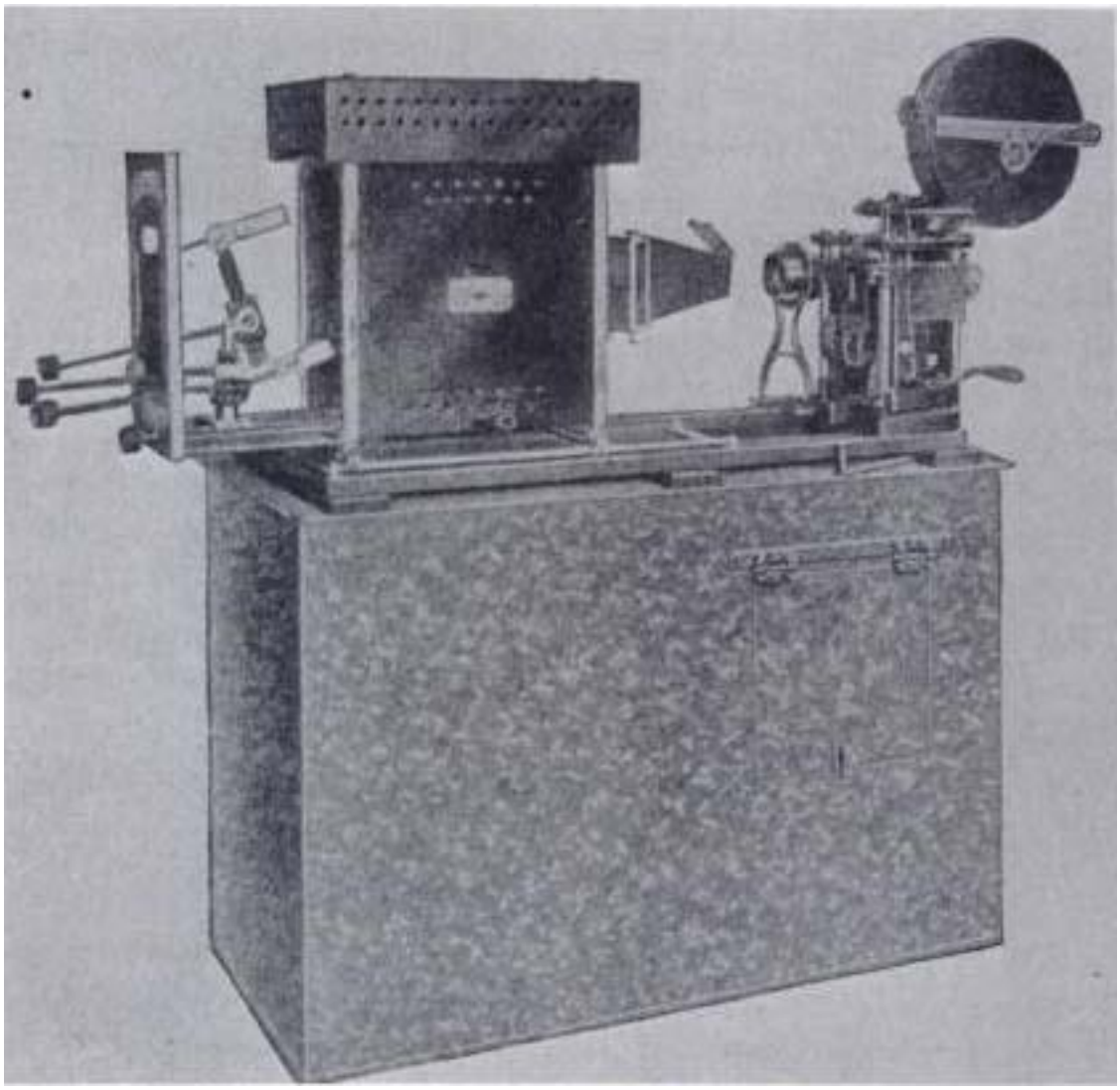

Polyscope 35 mm movie projector late gear driven
Selig Polyscope Tank Model Projector
David Sherrill Hulfish Cyclopedia of Motion Picture Work

LATE GEAR DRIVEN PROJECTORS

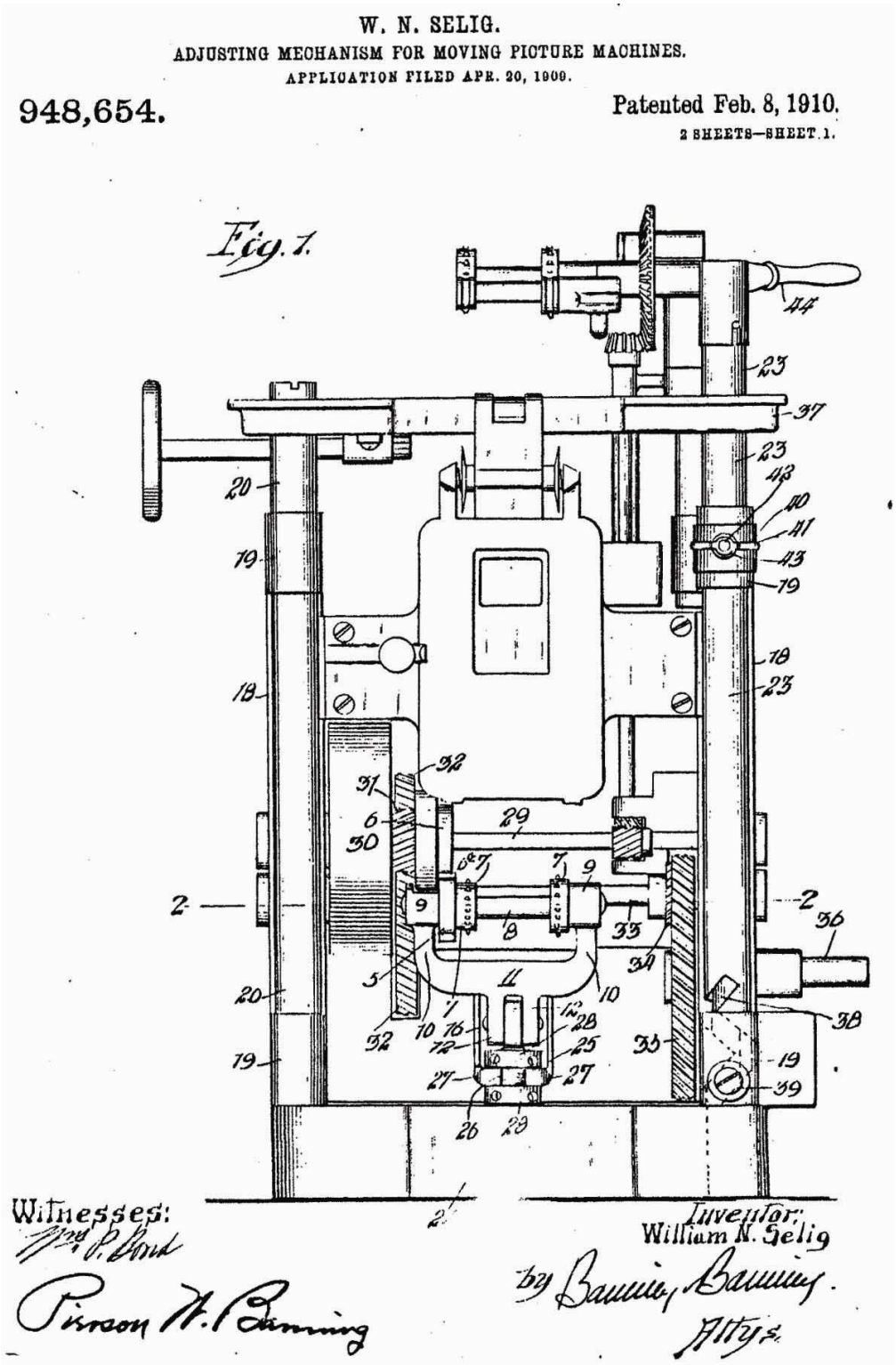

Polyscope 35 mm movie projector late gear driven
W. N. Selig Patent 948,654 Patented Feb. 8, 1910

LATE GEAR DRIVEN PROJECTORS

W. N. SELIG.
ADJUSTING MECHANISM FOR MOVING PICTURE MACHINES.
APPLICATION FILED APR. 20, 1909.

948,654. Patented Feb. 8, 1910.

2 SHEETS—SHEET 2.

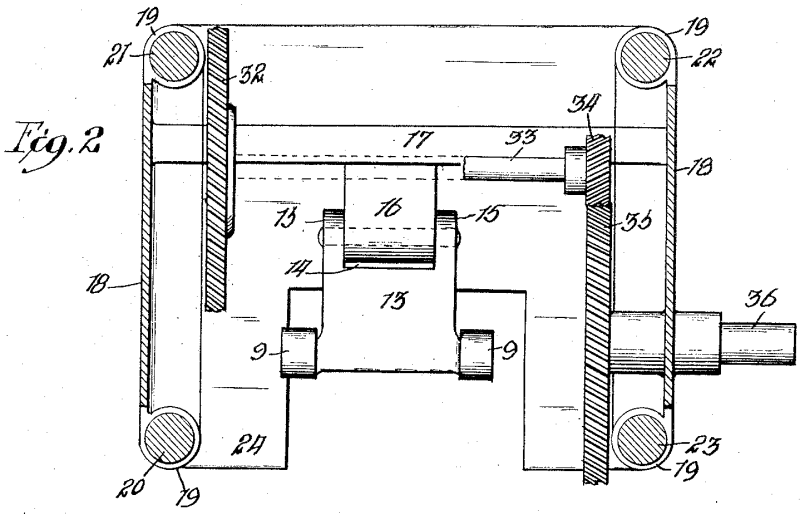

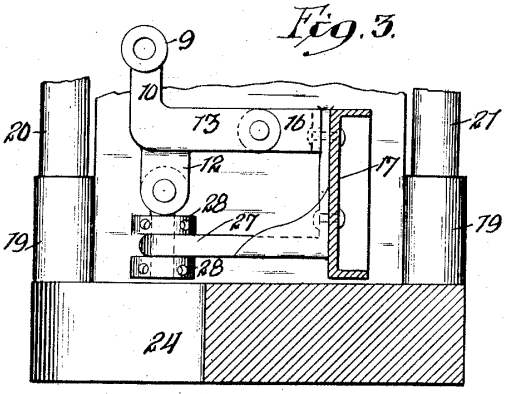

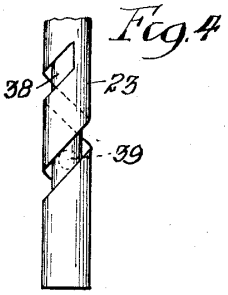

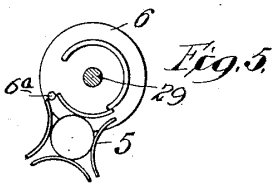

Witnesses:
Wm. P. Bond
Pierson W. Banning

Inventor:
William N. Selig
by Banning & Banning
Attys.

Polyscope 35 mm movie projector late gear driven
W. N. Selig Patent 948,654 Patented Feb. 8, 1910

VII
1903 FILM CATALOGUE
(Excerpts)

1903 FILM CATALOGUE (Excerpts)

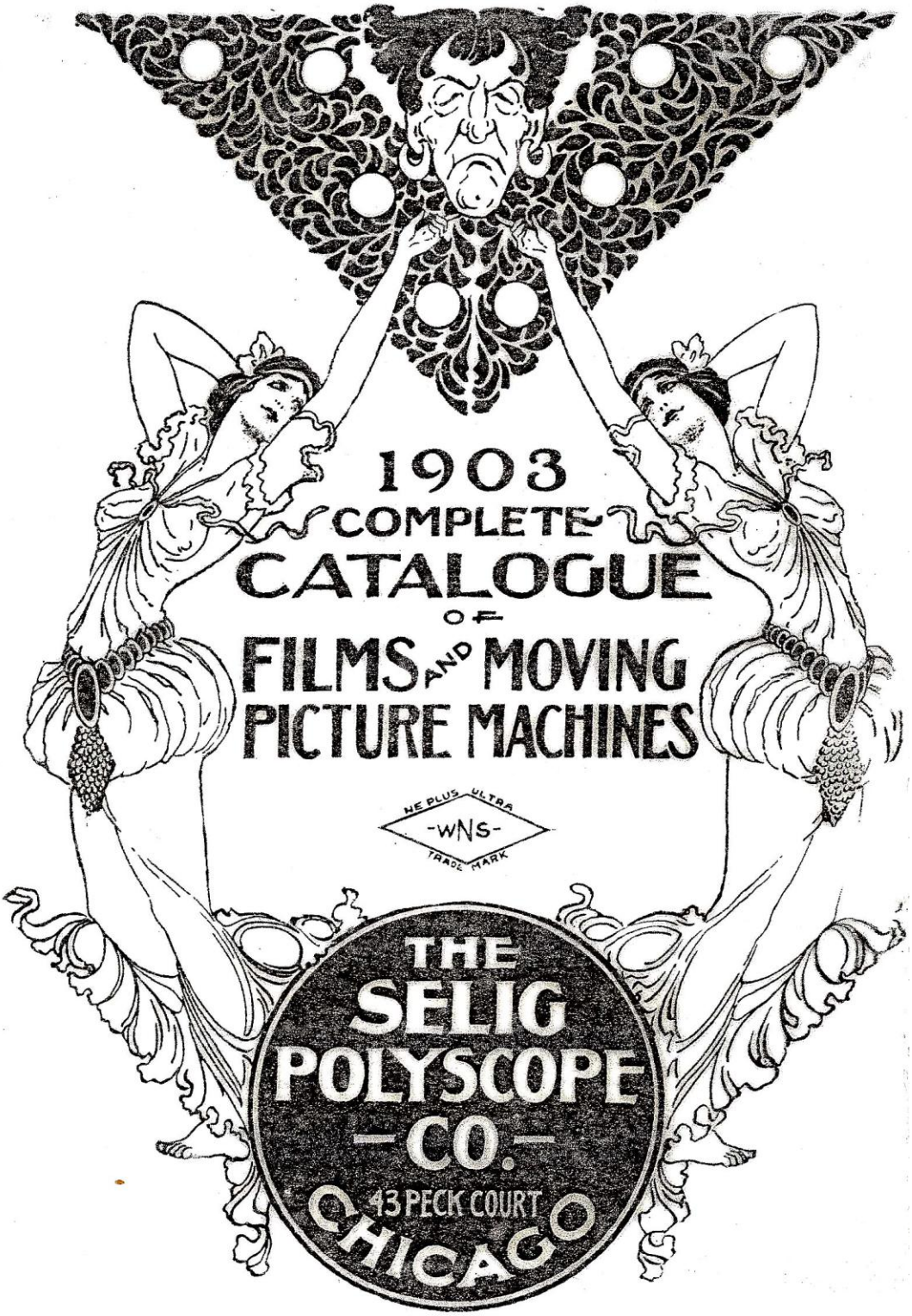

1903 complete catalogue of films

S159. Overland Flyer.....Over

Showing a scene at the depot at La Junta, Colo., upon the arrival of the famous Overland Flyer of the A., T. & S. F.; shows the people alighting, the baggage truck being loaded, the engineer leaving engine to receive orders, the people clambering aboard, the conductor's signal to start, and then—they leave—something new, fine.

50 ft. $6.75

S160. The California Limited of the Santa Fe Route.....Santa Fe

A fine view of one of the grandest and most beautifully and fully equipped trains in the world. This picture was taken near Los Angeles, Cal., and shows the foliage of that section of the country. The train is full vestibuled, electrically lighted, and is running at the high rate of 65 miles an hour. We call your attention to how steadily the cars ride, causing no jumps or flickers in the picture.

50 ft. $6.75

S161. Train on High Bridge.....High

Photographs have been taken of trains under all conditions, but it remained for us to produce a novelty. This picture shows the famous fast flyer of the Queen & Crescent Route passing over the wonderful high bridge in Kentucky. This picture is bound to create a great stir wherever shown.

50 ft. $6.75

S162. Louis & Nashville Flyer....Louis

50 ft. $6.75

S163. Illinois Central Flyer.....Buffet

75 ft. $10.15

S174. Colorado Special, Chicago & Northwestern Ry.....Buck

50 ft. $6.75

These are all fine, clear and distinct films on subjects that have proven the most lasting and popular in motion pictures. The sight of a train in rapid motion gradually coming nearer to the audiences, especially when accompanied by approaching sounds, produce a very vivid and realistic effect on the minds of the audience and proves extremely attractive. There is little choice between these films, which are all excellent; the selection is placed at our customers' disposal to enable them to show trains which would be appreciated in the localities in which they might happen to be exhibiting.

—30—

Polyscope 1903 complete catalogue of films

Panoramic Views.

—o—

S165. Royal Gorge.....Royal

Many people have seen pictures of the Royal Gorge, but few have ever seen the Gorge itself. Well, all is necessary to show them this picture, taken from the front end of a locomotive coming through that famous and grand spot. The hanging bridge, the streams, the mountains high up in air—all are visible. The picture is indeed grand. Picture taken through courtesy of the Denver & Rio Grande Railway, the Scenic Line.

50 ft. $6.75

S166. Harper's Ferry.....Ferry

This historic old spot has been photographed time and time again, but this is considered one of the finest. It is a panoramic view, showing the river, the mountains, the old-style house and the John Brown monument. This is one of the many interesting sights along the route of the famous Baltimore & Ohio Railway.

50 ft. $6.75

S167. Mississippi River.....Bulger

This picture was taken from the Pioneer Limited as it comes along the shores of the Mississippi river. It shows steamboats, small boats and shore line. It is indeed an interesting picture showing the old river style of travel and the more modern railway trains.

50 ft. $6.75

S168. The Dells of Wisconsin... .....Dells

Another panoramic view full of life and action, showing the far-famed and beautiful dells of Wisconsin on the C., M. & St. P.

50 ft. $6.75

S169. Memphis & Ft. Scott Railway Bridge.....Scott

This film was taken from the front of a moving train crossing the great bridge which spans the Mississippi river at Memphis, Tenn. The bridge itself, the river and the approaches to the city as the train leaves the bridge are all shown in this film with wonderful clearness and fidelity.

150 ft. $20.25

—31—

Polyscope 1903 complete catalogue of films

VIII
SOME SELIG POSTERS
(A small selection)

SOME SELIG POSTERS

Selig poster, the Spoilers,1914
A famous fight scene between Thomas Santschi and William Farnum

SOME SELIG POSTERS

Selig poster, the Spoilers, 1914
A famous fight scene between Thomas Santschi and William Farnum

SOME SELIG POSTERS

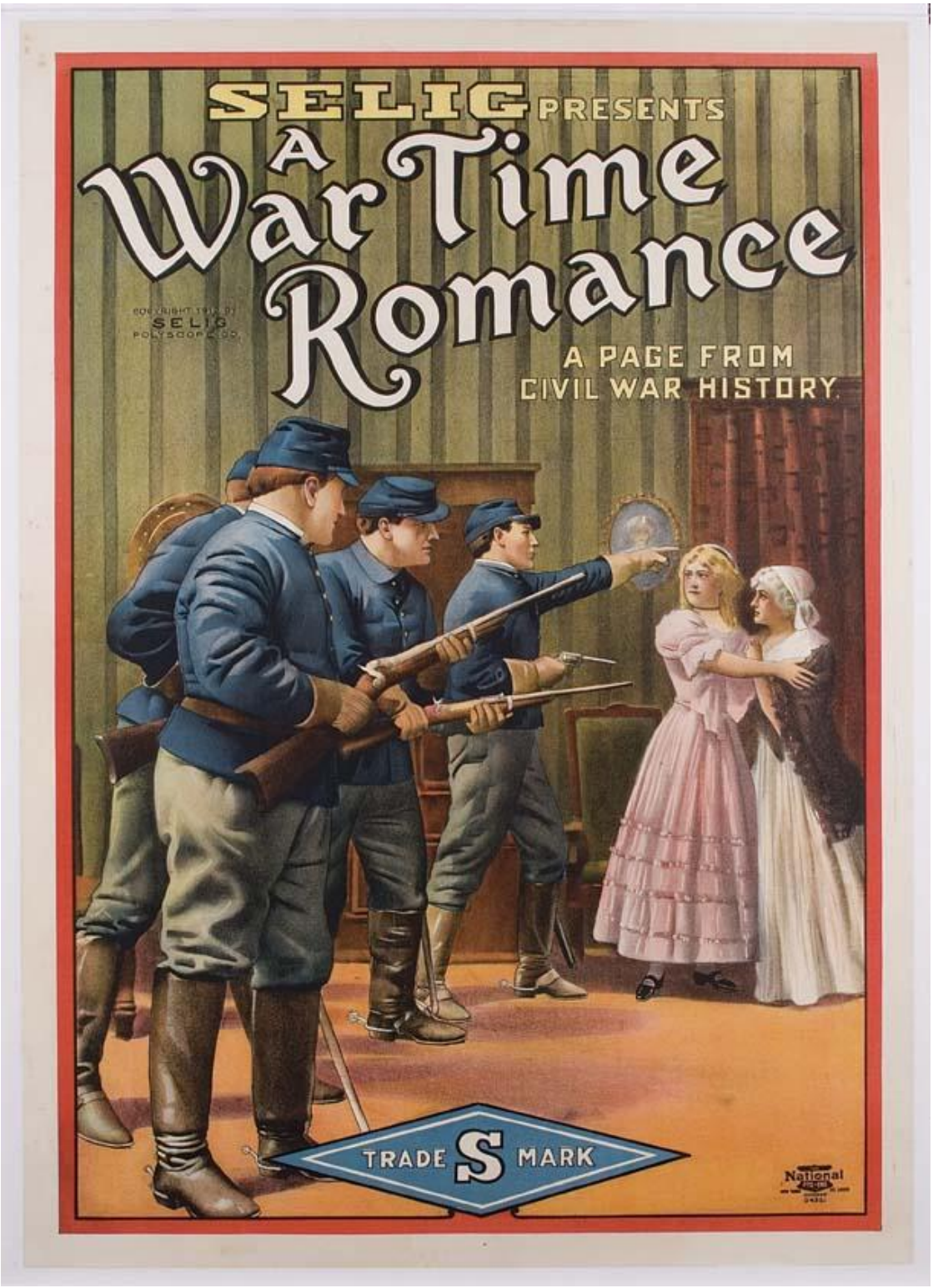

Selig poster, A War Time Romance

SOME SELIG POSTERS

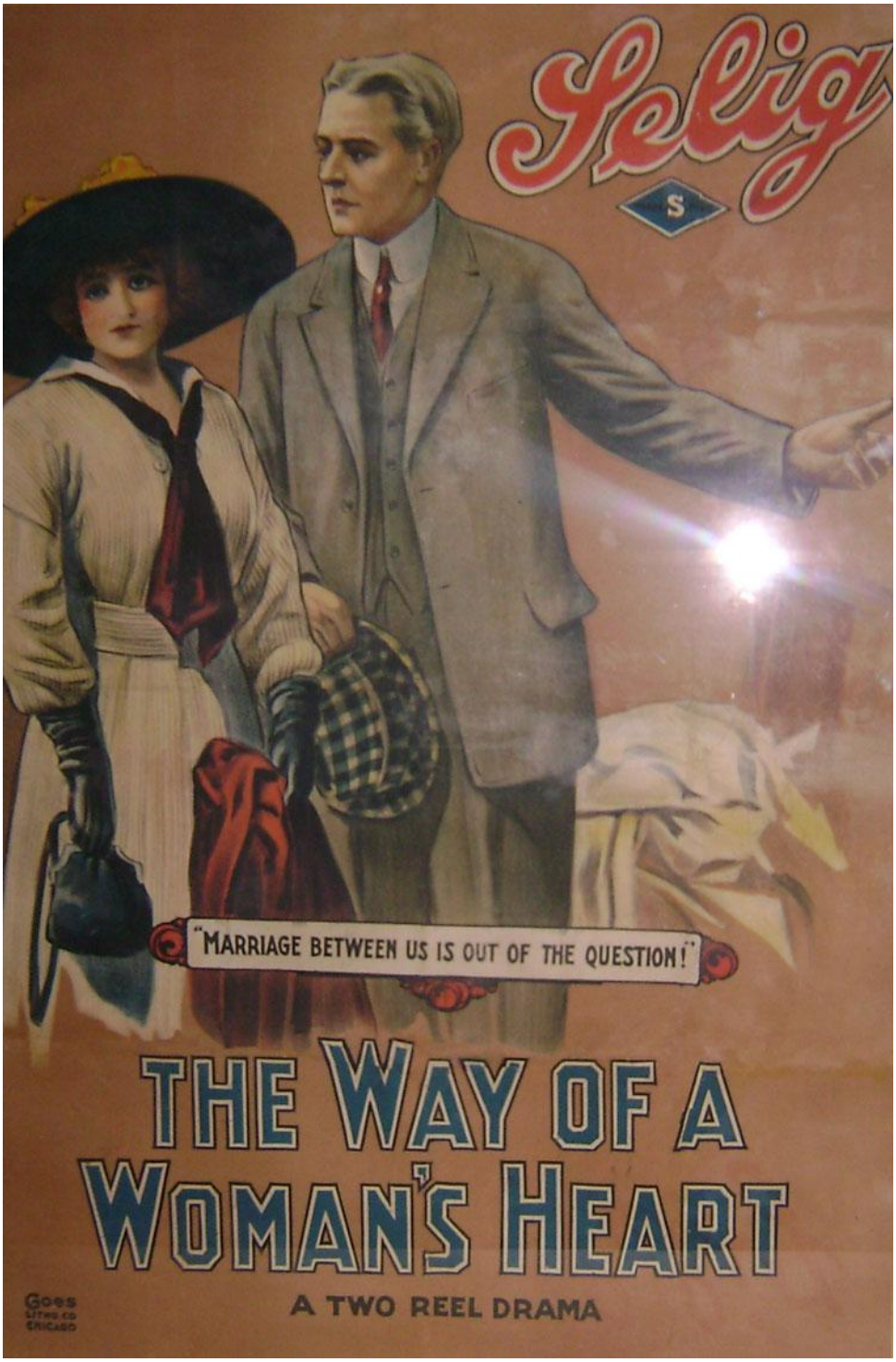

The Way to a Woman's Heart, Eugenie Besserrer, Charles Clary,
August 30, 1915, 2 reels Selig Films.
Collection Soterios Gardiakos

IX
ADDENDUM

ADDENDUM

POLYSCOPE PROJECTORS IN COLLECTIONS

Academy Of Motion Pictures arts and sciences, Hollywood, California, USA

Eastman House, Rochester New York, USA

Soterios Gardiakos, Aurora, Illinois USA and Kalamata, Greece, (There are only two complete machine, Lamp Housing, Board, Projector with intake and outtake arms and cans known to exist and they are both in my collection)

Paul Potash, Oley, serial number 317, Pennsylvania, USA

Smithsonian, Washington D.C., USA

Carey Williams, Chicago, Illinois USA (three heads, two of the earliest known to exist)

SELIG PATENTS:

712,462 Patented Oct. 28, 1902 ("for 1900 Selig Polyscope", Ray Bryan)

851,654 (Ray Bryan files)

948,654 Patented October 8, 1910 ("for 1910 Selig Polyscope", Ray Bryan)

PATENT RELATED TO THE SELIG POLYSCOPE

Patent number 971,891 (application filed Nov. 4, 1909, Patented Oct. 4, 1910) was issued to G. E. Hoglund, In the Ray Bryan files there is a handwritten note "concerning Selig Polyscope" I do not know what the connection is.

X
BIBLIOGRAPHY

BIBLIOGRAPHY

Blum, Daniel, *A PICTORIAL HISTORY OF THE SILENT SCREEN*, New York, 1953

Gardiakos Soterios, *THE CINEMATIC MACHINERY COLLECTION OF SOTERIOS GARDIAKOS.* Kalamata Aurora 2002 with updates

Hulfish, David Sherrill, *CYCLOPEDIA OF MOTION PICTURE WORK*, published in several updated editions, Chicago

Lahue, Edited by, Kalton C., *MOTION PICTURE PIONEER the Selig Polyscope Company.* South Brunswick and New York 1973

Malkames, Don G., *EARLY PROJECTOR MECHANISMS*. Foreword by Bernard D. Plarun, October 1957 Journal of the SMPTE, Volume 66

Musser, Charles, *THE EMERGENCE OF CINEMA – The American screen to 1907*, Berkeley, California., 1990

Ramsaye, Terry, *A MILLION AND ONE NIGHTS – A HISTORY OF THE MOTION PICTURE*, 1964 reprint of the New York 1926 edition.

Richardson, F. H., *WHAT HAPPENED IN THE BEGINNING*, September 1925, transactions of the SMPTE.

ARCHIVES

Bryan, Ray, Files, Museum of the Moving Image, Astoria New York, USA

Gardiakos, Soterios, Kalamata Greece and Aurora, Illinois USA

Rutgers University, The Edison Papers

Williams, Carey, Chicago, Illinois, USA

Wyoming Historical and Geological Society, Wilkes Barre, Pennsylvania, USA

BOOKS AND MONOGRAPHS WRITTEN BY SOTERIOS GARDIAKOS

October 1, 2011

Relating to Movie Machinery

Cinematic Machinery Collection of Soterios Gardiakos, 2002, ISBN 0-9777537-3-5, August 25, 2011, 227 pages

A Warwick (Baucus & Maguire Ltd.) spoolbank Projector ca 1897 In the Collection of Soterios Gardiakos, Photographs by Katerina Nike Gardiakos**.** 2001, ISBN 0-9777537-0-0, June 1, 2008 49 pages

Pre 1900 American Made Movie Projectors. 2002. ISBN 0-9777537-4-3, June 30, 2010, 143 pages

A Compilation of Greek made Movie Projectors and other Cinematic Equipment. From information provided to Soterios Gardiakos by Nikos Theodosiou. 2002.
ISBN 0-9777537-2-7, June 20, 2009, 60 pages

Kinematic Peephole Machines Using a Continuous Strip of Film or Paper, 2002
ISBN 0-9777537-5-1, June 22, 2010, 73 pages

LeRoy Projectors, An enigmatic pioneer in the quest to project motion pictures on the big screen. ISBN 0-9777537-7-8, July 17, 2008, 48 pages

Optigraph 35 mm projectors, August 23, 2008 , 49 pages

The Peerless Kinetograph made by Geo. A. Knaak Co., of Oshkosh Wis. U.S.A. and the Veriscope Projector, ***An Inquiry into an enigma,*** September 30, 2011, 33 pages.

A Prototype 35 mm Movie Projector in the Collection of Soterios Gardiakos Made by Carl J. Lang (Lang Manufacturing works) of Olean, New York, March 15, 2010, 56 pages

Peep Show Phantoscope ca 1904-1905 made by C. Francis Jenkins in the Collection of Soterios Gardiakos, November 22, 2010, 34 pages

Spoolbank Projectors, 2001.ISBN 0-9777537-1-9, June 31, 2010, 82 pages

Selig Polyscope Movie Projectors made by William N. Selig – a compilation, September 25 2011, 62 pages.

Cineograph movie projectors and some cameras Made by Siegmund Lubin 1896-1916 ***A checklist,*** October 25, 2011 62 pages

From the JENKINS PHANTOSCOPE to the ARMAT VITASCOPE
Chronologically arranged, June 25, 2011, 132 pages

Works in progress relating to movie machinery

A Possible Classification of Thomas Edison's Kinetoscopes, 2002, (Incomplete, work in progress)

35mm Movie Projectors, A work in progress with over 1,300 pages so far. (Dec. 2006)

Relating to Numismatics

The Coinage of Modern Greece, Crete, the Ionian Islands and Cyprus, Chicago, 1969, ISBN 0-916710-02-5, 96 pp, + 16 plates, hardbound

The Coins of Cyprus 1489-1571, Chicago, 1975, ISBN 0-916710-19-X, 32 pp, fully Illustrated, paper cover

A Catalogue of the Coins of Dalmatia et Albania 1410-1797. Chicago, 1970 ISBN 0-916710-67-x, 32 pp, illustrated, maps, tables, paper cover

The Coinages of Alexander the Great, S. Gardiakos Editor. ISBN 0-916710-82-3, 1,007 pp, +157 plates, hardbound in three volumes

Books on Soterios Gardiakos

The Sculptures of Soterios Gardiakos, **(From the Bronze age to the Modern Age)** By Chryssafenia Gardiakos, Photographs by Brad Baskin and Katerina Nike Gardiakos. September 1, 2011, ISBN 0-9777537-6-X. featuring 140 sculptures, 167 pages

Selections from the collection of Soterios and Irlanda Gardiakos,September 20, 2011, 218 pages1

MY LIFE an illustrated photo album of me, my family and my friends, from the early twentieth century to the present. July 30, 2011, 389 pages

Site on Movie Machinery: http://bioscope.biz/

Site on Sculpture: http://gardiakos.com/

Email: sgardiakos (omit) @aol.com

UNIGRAPHICS INC.
64 South Water Street
Aurora, Illinois 60505